No. 721,972. PATENTED MAR. 3, 1903.

G. R. SIEFKEN.

GAS REGULATING SYSTEM.

APPLICATION FILED MAY 17, 1902.

NO MODEL. 2 SHEETS—SHEET 1.

Fig. 1.

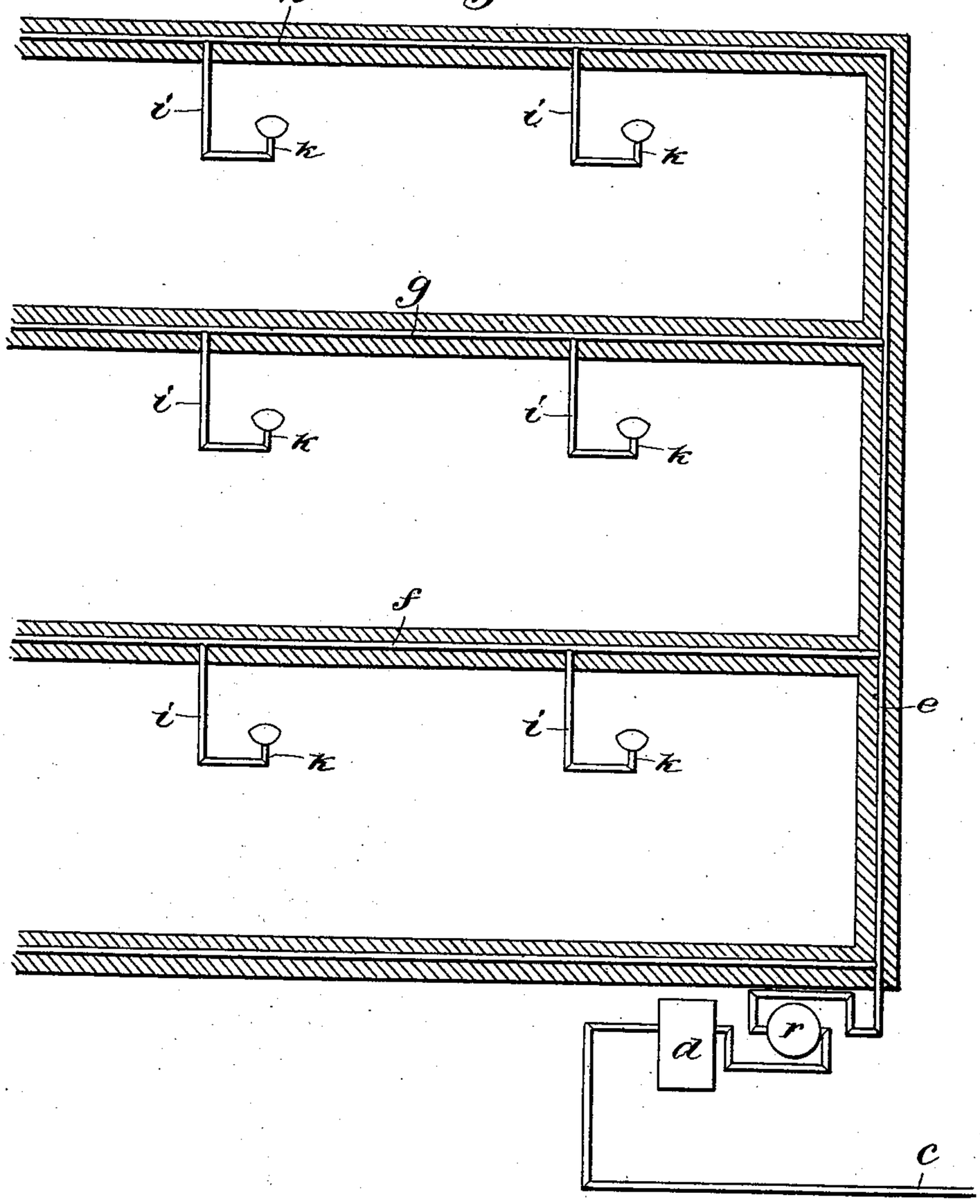

Fig. 4.

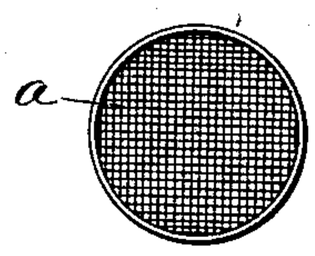

Fig. 5.

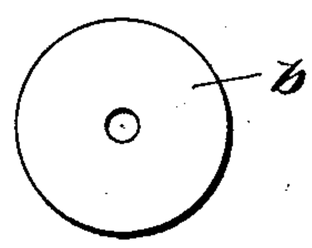

Witnesses:
Blanche L. West
Geo. C. Davison

Inventor:
George R. Siefken
By Dwight B. Cheever
Atty.

THE NORRIS PETERS CO., PHOTO-LITHO., WASHINGTON, D. C.

No. 721,972. PATENTED MAR. 3, 1903.

G. R. SIEFKEN.

GAS REGULATING SYSTEM.

APPLICATION FILED MAY 17, 1902.

NO MODEL. 2 SHEETS—SHEET 2.

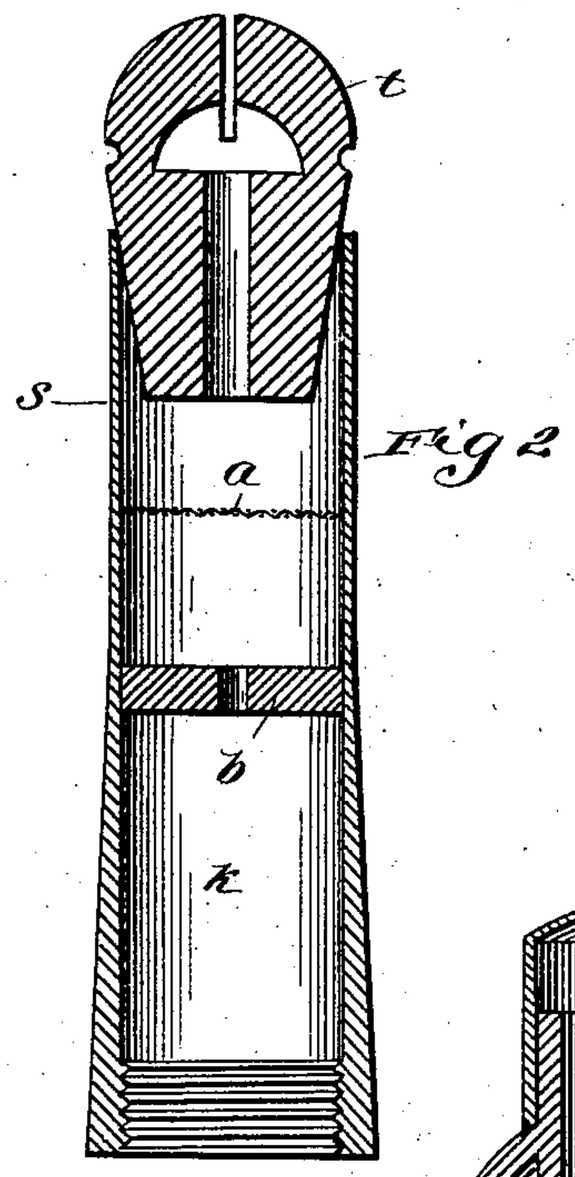

Fig 2

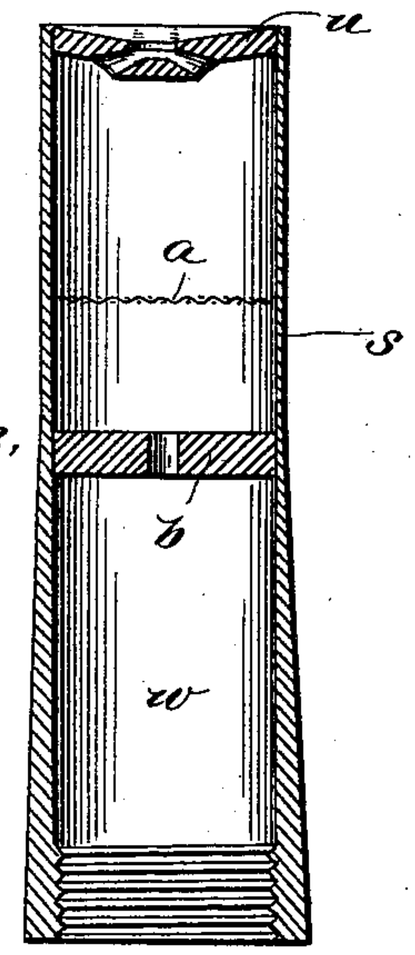

Fig. 3.

Fig. 6.

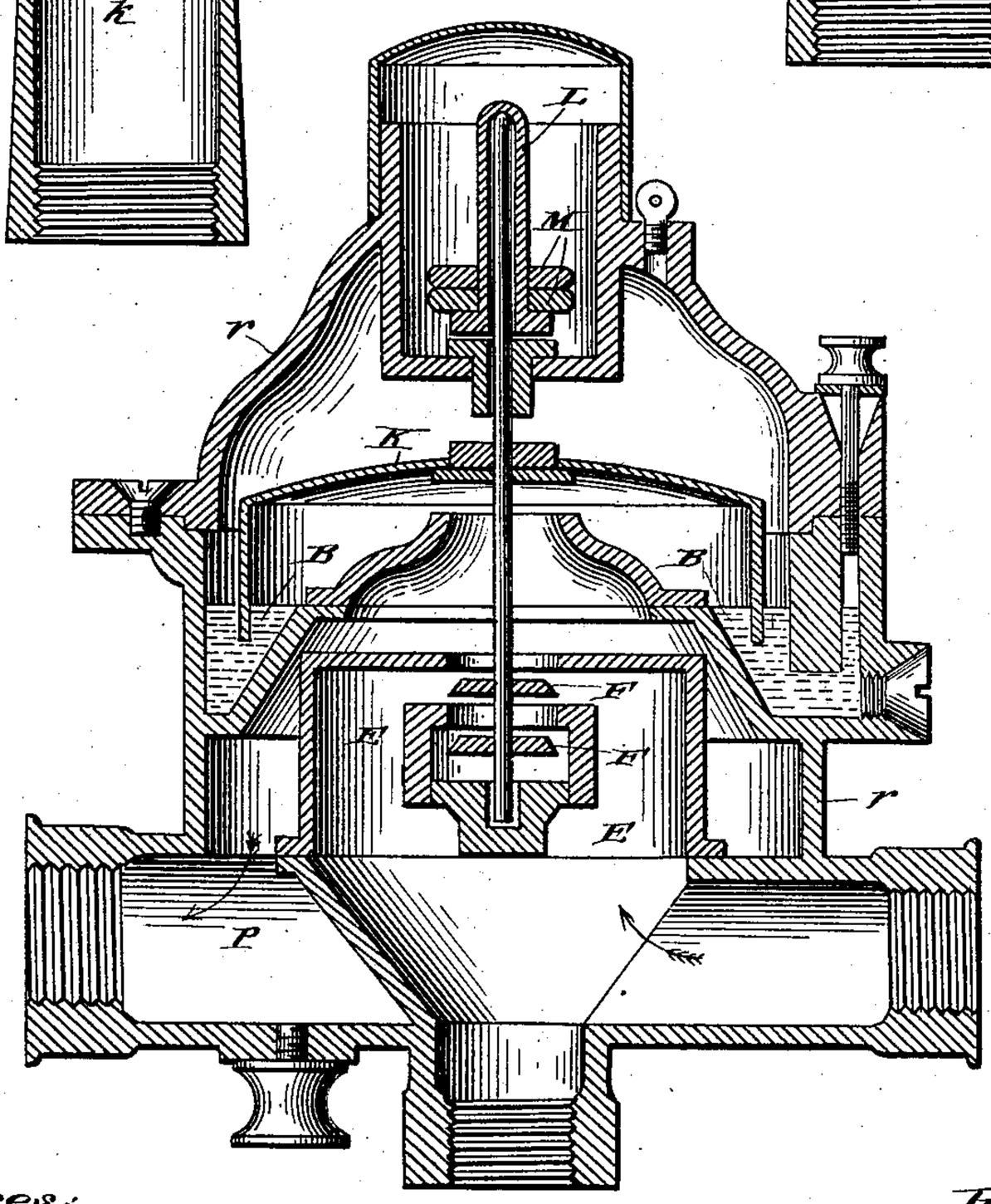

Witnesses:
Blanche L. West.
Geo. C. Orrion.

Inventor:
George R. Siefken
By Dwight B. Cheever.
Atty

THE NORRIS PETERS CO., PHOTO-LITHO., WASHINGTON, D. C.

UNITED STATES PATENT OFFICE.

GEORGE R. SIEFKEN, OF CHICAGO, ILLINOIS.

GAS-REGULATING SYSTEM.

SPECIFICATION forming part of Letters Patent No. 721,972, dated March 3, 1903.

Application filed May 17, 1902. Serial No. 107,811. (No model.)

To all whom it may concern:

Be it known that I, GEORGE R. SIEFKEN, a citizen of the United States, residing at Chicago, in the county of Cook and State of Illinois, have invented a new and useful Gas-Regulating System, of which the following is a specification in its best form now known to me, reference being had to the accompanying drawings, in which similar letters indicate the same parts throughout the several views.

In distributing gas in a building great difficulty arises from the fact that the pressure of gas in the mains, and consequently in the building, varies greatly and also from the fact that with a given pressure of gas entering from the main the pressure at the gas-tips located different distances from the supply-opening on a given floor will vary in proportion to the distance the tip is away from the opening, and in a similar way the pressure at tips on upper floors of a building is greater than at tips in corresponding positions on lower floors. As all the ordinary gas-tips are designed to burn at a fixed pressure to produce a maximum efficiency of light given and gas consumed, this variation of pressure has made it practically impossible to secure efficient results.

The object of my invention is to provide a system combining the use of a gas-regulator and graduated checks for use in connection with the various gas-tips for so regulating and graduating the supply of gas that the pressure at each of the gas-tips in the building will be substantially equal, this irrespective of the turning on or off of one or more gas-tips in the house and of variations in the main, this also without the use of pipes of graduated sizes, which are expensive to design and install in a new building and out of the question in an old one.

My invention also consists in the details hereinafter more fully described and claimed.

In the drawings, Figure 1 is a side elevation showing the piping of a building having the system of my invention applied thereto, the main pipes of the building appearing in section. Fig. 2 is a sectional view of an ordinary burner with a slit union lava tip. Fig. 3 is a sectional view of the same burner equipped with a flat top "union-tip," which my invention renders particularly usable. Fig. 4 is a plan view of a screen; and Fig. 5, a similar view of a check used in connection with the burner shown in Figs. 2 and 3, the screen being *a* and the check *b* in said figures. Fig. 6 is a sectional detail view of one of several commercial gas-regulators which may be used in the installation of the system of my invention.

Referring again to the drawings, *c* represents the gas-pipe connecting the street-mains (not shown) with the building. This pipe *c* passes through the meter *d*, of ordinary construction, into the vertical house-pipe *e*, which has the horizontal pipes *f*, *g*, and *h* running to the different floors of the building. From these horizontal extensions are the usual drop-pipes *i*, having their ends terminating in burners *k* or *w*. (Illustrated in Figs. 2 and 3.) In each of these burners are placed checks *b*, having therein openings *l m n o p q*, the size of the opening being so proportioned with reference to the distance each tip is from the meter, both horizontally and vertically, that the gas escaping through the opening in each check and passing through the screens and the lava tips will be at substantially the same pressure, and consequently move through the tips at the same velocity, this on the assumption that the gas is of uniform pressure at the meter.

It is of course understood that the gas-burners shown in Figs. 2 and 3 consist of vertical pipes *s*, of a standard size, adapted to have the lava tips *t* or *u* inserted in their ends and also adapted to have the checks *b*, having the different-sized openings, and the screens *a* inserted removably within them, as shown.

In order to make the gas at the meter of uniform pressure, I use the regulator *r*, one form of which is shown in Fig. 6. The controller or regulator may be connected on the outlet of the meter or in any convenient position between the meter and the lights.

When the gas enters the controller, it passes first through the double inlet E E and out through the double valve F F, and so under the float K, which, rising or falling in the

mercury B, according to the varying pressure from the main and the varying consumption, opens or closes the valve F.

Several lead weights M are supplied with each controller by means of which the defined force of the gas may be modified according to the permanent requirement. Thus if the delivery is found to be scarcely sufficient a weight placed on the thimble L will increase the regular pressure. On the other hand, if the force is found too great the removal of one of the weights will at once reduce it. After the gas has passed through the valve as just described it then passes out through the passage P and on through the pipe *e* into the building.

I desire to particularly call attention to the fact that a system of various-sized checks without the use of a gas-regulator on the meter would do no good at all toward regulating gas at burners, as the main cause in variation of pressure is turning off and on of gas-openings throughout the building and rising and falling of gas-pressure in street-mains and that a gas-regulator on the meter without the graduated checks would not produce a perfect result, as the specific gravity of gas causes the pressure to increase with its elevation in pipes running vertically and decreases with the distance it has traveled in pipes running horizontally.

In the operation of my invention I first install the mechanism in the general form shown and regulate the regulator or controller *r* to the desired gas-pressure. I now go to the various jets *k* and by experiment with or without the use of a testing instrument determine upon the proper-sized check-opening for the particular location of the jet. I now insert a check of the proper size in the burner and replace the screen *a* and the gas-tip *t* or *u*. When these adjustments have been made, the system is ready for use and will supply gas at substantially equal and uniform pressure at all the tips in the building.

My invention is also equally advantageous in use where burners of different capacities are used at different points in the building—as, for instance, a Bunsen burner or small gas-stove—for I can then increase at the regulator the pressure of gas in the pipes, so as to supply a sufficient pressure of gas for such burners and reduce the size of the checks on the ordinary tips, so that the gas will still be delivered to them at the proper pressure for best efficiency.

Having thus described my invention, what I claim as new, and desire to secure by Letters Patent, is—

1. In a gas-regulating system, the combination of the pipes adapted to distribute the gas having an intake-opening and a plurality of exit-openings in various locations, a controller or regulator on the intake-opening adapted to keep the gas entering the pipes at uniform pressure, and checks on the exit-openings having orifices of selected varied sizes whereby the gas issuing from the various exit-openings flows out at the pressure desired at each point.

2. In a gas-regulating system, in combination with the vertical and horizontal distributing-pipes of a building, a regulator at or near the meter adapted to control the pressure of gas entering the building, and checks inside the pipes near the burners having openings therein so proportioned to the distance of the jet from the meter that the flow of gas from each jet is at the pressure desired for that jet and substantially constant.

GEORGE R. SIEFKEN.

Witnesses:

DWIGHT B. CHEEVER,

ROBERTA LEE TERRY.