No. 720,862. PATENTED FEB. 17, 1903.

J. H. WAGENHORST.

BLUE PRINTING APPARATUS.

APPLICATION FILED NOV. 22 1902.

NO MODEL. 2 SHEETS—SHEET 1.

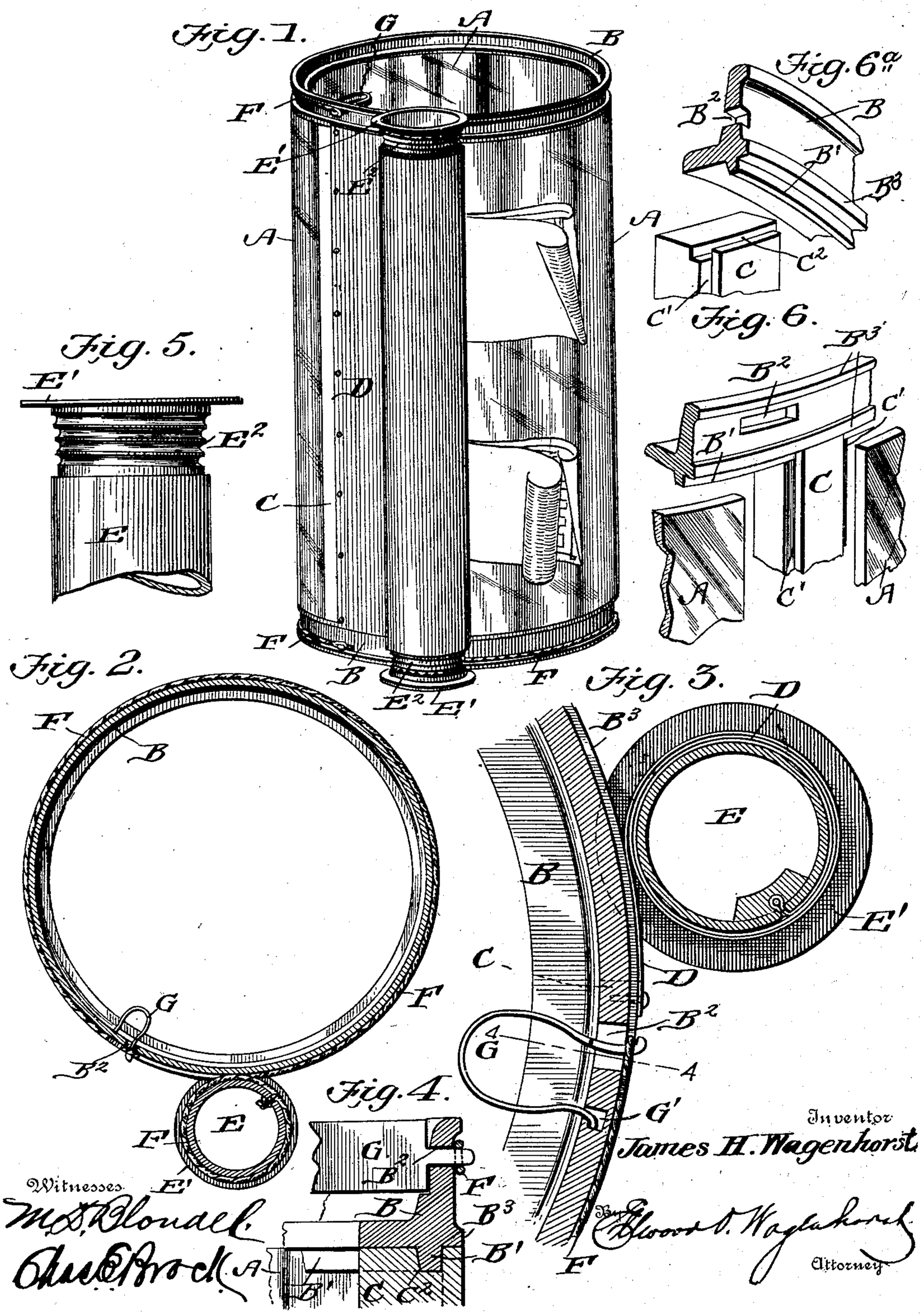

THE NORRIS PETERS CO., PHOTO-LITHO., WASHINGTON, D. C.

No. 720,862. PATENTED FEB. 17, 1903.

J. H. WAGENHORST.

BLUE PRINTING APPARATUS.

APPLICATION FILED NOV. 22 1902.

NO MODEL. 2 SHEETS—SHEET 2.

Fig. 7.

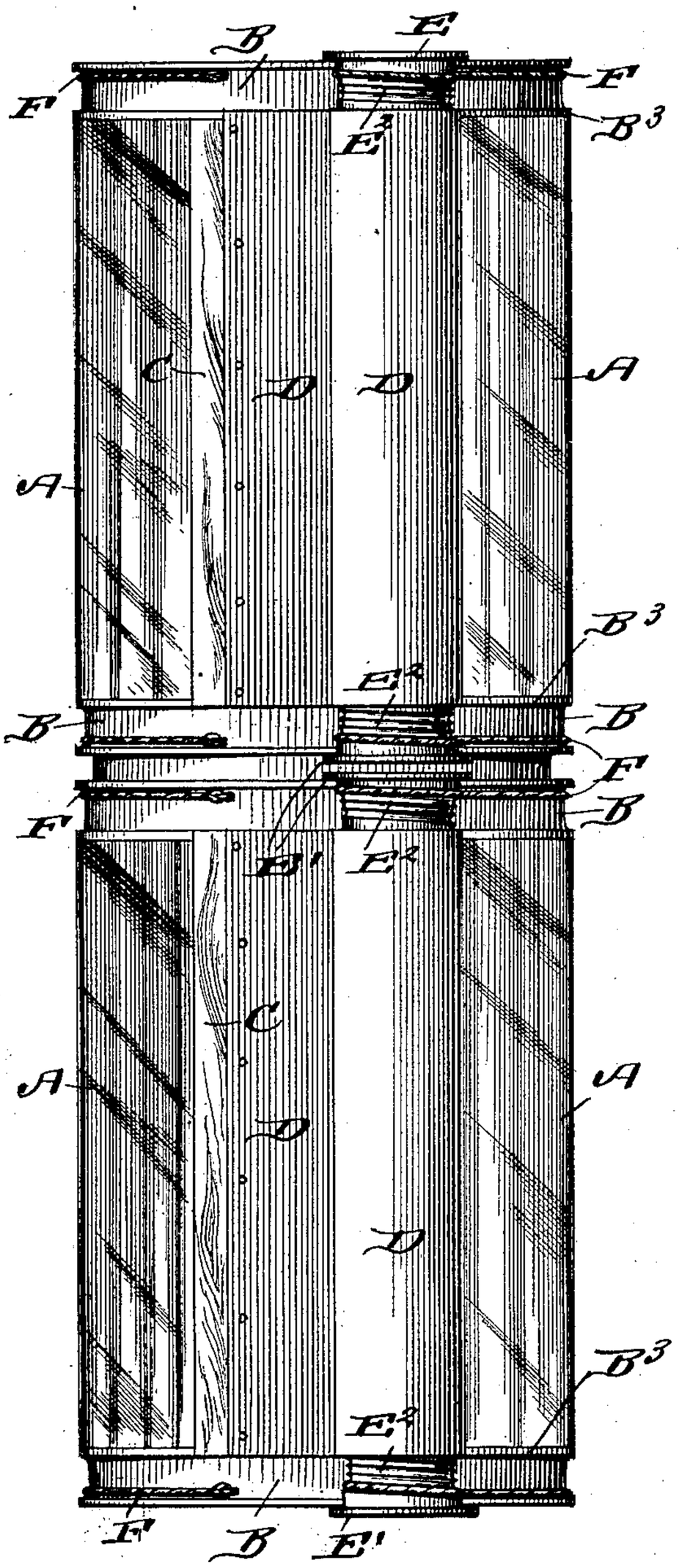

Fig. 8.

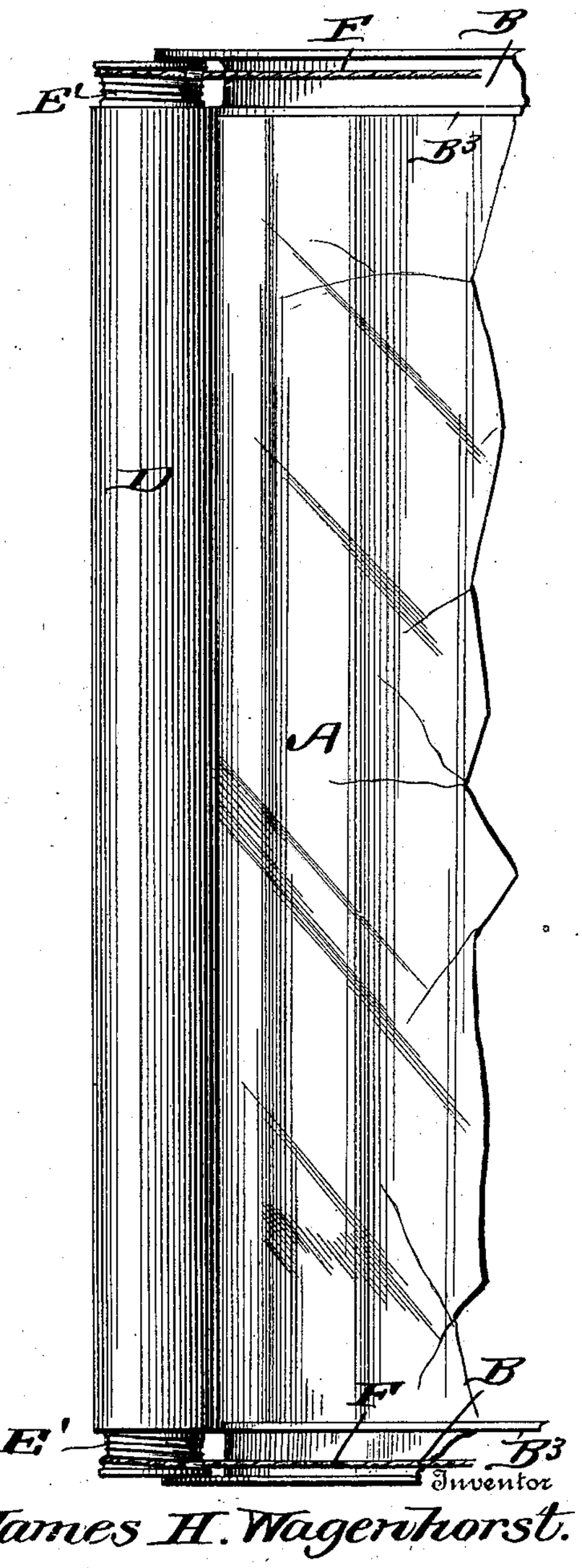

Witnesses

M. D. Blondell,

Chas. E. Brock,

Inventor

James H. Wagenhorst.

By Elwood V. Wagenhorst,

Attorney

UNITED STATES PATENT OFFICE.

JAMES H. WAGENHORST, OF MANSFIELD, OHIO.

BLUE-PRINTING APPARATUS.

SPECIFICATION forming part of Letters Patent No. 720,862, dated February 17, 1903.

Application filed November 22, 1902. Serial No. 132,449. (No model.)

To all whom it may concern:

Be it known that I, JAMES H. WAGENHORST, a citizen of the United States, residing at Mansfield, in the county of Richland and State of Ohio, have invented a new and useful Improvement in Blue-Printing Apparatus, of which the following is a specification.

This invention relates generally to an apparatus for making blue-prints in which a transparent cylinder is employed, an electric or other light arranged within the cylinder, and the tracings or negatives and sensitized paper arranged upon the exterior of the cylinder; and the object of this invention is to provide an improved means for holding the negatives and sensitized paper upon the exterior of the cylinder while the printing operation is being carried on.

Another object of the invention is to provide an improved means for holding a number of tracings or negatives and sensitized paper and also to provide a holding means by which tracings or negatives and sensitized paper can be introduced in successive order or at different times without disturbing or interfering with the tracings or negatives first introduced.

A still further object is to provide a tension device whereby the tracings or negatives and sensitized paper will be securely held in place at all times.

With these various objects in view the invention consists, essentially, in the employment of a transparent cylinder and a curtain attached at one edge to the said cylinder, said curtain edge being arranged longitudinally of the cylinder, the opposite end of the curtain being connected to a roller and wound thereon, said roller being adapted to be revolved partially or completely around the cylinder, carrying with it the curtain, the tracings or negatives and sensitized paper being arranged between the curtain and the exterior of the cylinder, the roller carrying the curtain being held in close contact with the surface of the cylinder at all times through the medium of cables connecting the cylinder and roller, said cable being so constructed and arranged as to hold the roller in close contact with the cylinder both while the roller is being revolved around the cylinder and also while the same is at rest.

The invention also consists in providing a suitable tension device whereby the said roller is held in close contact with said cylinder.

The invention consists also in certain details of construction and novelties of combination, all of which will be fully described hereinafter, and pointed out in the claims.

In the drawings forming a part of this specification, Figure 1 is a perspective view showing the practical application of my invention. Fig. 2 is a horizontal sectional view taken through the cylinder and roller, said view being intended to clearly illustrate the relative position of the cylinder, roller, and cable for holding the roller to the cylinder. Fig. 3 is an enlarged detailed sectional view showing the relative positions of the cylinder, roller, and curtain and also the tension device for producing a constant tension upon the cable. Fig. 4 is a detailed sectional view on the line 4 4 of Fig. 3. Fig. 5 is a detail view illustrating in elevation the upper end of the roller, and Figs. 6 and 6[a] are detail perspective views illustrating the manner of connecting the cylinder and wooden strip by the metallic rings. Fig. 7 is a view illustrating the manner of arranging the curtain in sections. Fig. 8 is a view showing a modified form of ring.

In the practical embodiment of my invention I employ a glass cylinder A, which is preferably composed of a single section divided longitudinally; but it will be understood that the cylinder can be made in two or more sections, if preferred. Metallic rings B are arranged at the opposite ends of the cylinder, said rings having annular rib B′ upon the upper and lower faces, against which the edges of the glass cylinder rest. A wooden strip C is interposed between the edges of the glass cylinder, said strip being rabbeted at each edge, as shown at C′, to receive the edges of the glass, and the upper and lower ends are grooved, as shown at C^2, to receive the rib B′, thus securely connecting the glass cylinder, wooden strip, and metallic rings. A curtain D is connected at one end to the wooden strip C, the opposite end of said curtain being connected to a roller E, said curtain being rolled around the said roller a number of times, and in practice I prefer to have the curtain of a length sufficient to completely encircle and envelop the cylinder. Connected to the up-

per and lower ends of the roller E are the cables F, each cable being wound several times around the end to which it is connected and in a direction opposite the direction in which the curtain is wound or rolled upon the roller. Each cable after being wound several times around the roller is passed completely around the cylinder and the end connected to one end of an essentially U-shaped spring G, the opposite end of said spring being seated in a recess G′, produced in each ring B, the free end of the spring working in a horizontal slot B^2, produced in the ring, so that the free end of the spring can have a limited movement, whereby the cable can be made to yield or can be taken up, as occasion requires. It will of course be understood that any form of yielding connection may be employed for connecting the ends of the cables to the top and bottom rings, so long as a yielding tension is maintained upon the cables.

In practice I prefer to construct the upper and lower ends of the rollers with flanges E′, which rest upon the upper and lower edges of the top and bottom rings, and, furthermore, I have found it desirable to provide the upper and lower portion of the roller with grooves E^2 for the purpose of guiding the cables during the winding operations, and in order to compensate for the increase thickness as the curtain is wound thereon I construct these grooved portions in tapering form, said grooved portions being widest at the upper and lower ends, respectively, of the upper and lower grooved portions. These details of construction while contributing to the ease of operation are not absolutely essential and may be varied or changed and, in fact, may be completely omitted without departing from the broad principle of my invention.

In order to guide the cables, the rings may be provided with outwardly-projecting flanges B^3 at their upper and lower edges, thereby preventing the cables slipping up or down during manipulation of the roller.

In Fig. 1 I have shown the manner of operating my invention and from which it will be seen that the tracings and the sensitized paper are placed next to the cylinder, and then the roller carrying the curtain is rolled around the cylinder by hand or otherwise to a point beyond the tracings and sensitized paper, and as the roller is revolved the curtain is unrolled, enveloping or covering the surface of the cylinder over which the roller has passed, and it is obvious that after one or more prints have been inserted and covered a second, third, and any number of series of prints may be subsequently inserted and covered without disturbing or interfering with the tracings and sensitized paper previously inserted. Thus the insertion of negatives and paper may be continued until the entire surface of the cylinder is covered, and during the entire operation the roller and curtain are to be held tight against the cylinder through the medium of the cables, which exert a constant tension upon the roller and curtain along the surface of the cylinder.

While I have shown and described my invention as applied to a cylinder, it is obvious that it may be applied to any other form-holder transparent object, and, in fact, it can be applied to surface less than a complete figure, and this surface may be either curved, straight, or mixtilinear.

Thus it will be seen that I provide a simple and efficient device for holding the tracings or negatives and sensitized papers, which device thoroughly accomplishes all of the objects hereinbefore mentioned. It will also be understood that the curtain may be divided longitudinally or rather two sections of curtain may be employed—one for the upper half of cylinder and one for the lower half—and of course the roller will also be made in two independent sections, this idea being a mere duplication of the device shown in Fig. 1 as shown in Fig. 7. It is also obvious that a flange can be made upon each ring for the purpose of holding the roller in place, this construction obviating the necessity of flanges upon the ends of the roller and serving exactly the same purpose as shown in Fig. 8.

Having thus fully described my invention, what I claim as new, and desire to secure by Letters Patent, is—

1. In a device of the kind described, a transparent surface, a curtain connected at one end to said surface, a roller to which the opposite end of the curtain is attached, and the cables connected to the roller, said cables holding the roller and curtain in contact with the transparent surfaces.

2. In a device of the kind described, a transparent surface, a curtain connected at one end to said surface, a roller to which the opposite end of the curtain is connected, and cables connecting the roller and surface, said cables being wound around the roller at opposite ends.

3. In a device of the kind described, a transparent surface, a curtain, connected thereto, a roller upon which the curtain is attached, and cables connecting the surface and roller, said cables being wound around the ends of the roller in a direction opposite to that in which the curtain is rolled upon the roller.

4. In a device of the kind described, the combination with a transparent surface, of a curtain connected thereto, a roller to which the curtain is also attached, the cables connected to the roller at opposite ends said cables being wound one or more times around the roller, and then yieldingly connected to the transparent surface.

5. In a device of the kind described, the combination with a transparent cylinder of the roller having grooved ends, a curtain carried by the roller and connected at one end to the cylinder, the cables connected to the roller, said cables passing around the ends of roller

and also around the cylinder and tension device for connecting the cables to the cylinder as specified.

6. In a device of the kind described, the combination with the transparent cylinder, of the metal rings, the roller and curtain carried thereby, the cables, and the U-shaped springs for connecting the ends of the cables to the metal rings, the ends of the rollers being tapered and grooved and provided with flanges as specified.

JAMES H. WAGENHORST.

Witnesses:
JOHN R. WALKER,
N. O. FLEMING.