No. 711,524. Patented Oct. 21, 1902.

H. J. PHILLIPS & M. F. GUINEY.

CONCRETE MIXER.

(Application filed Feb. 20, 1902.)

(No Model.) 2 Sheets—Sheet 1.

Fig. 1.

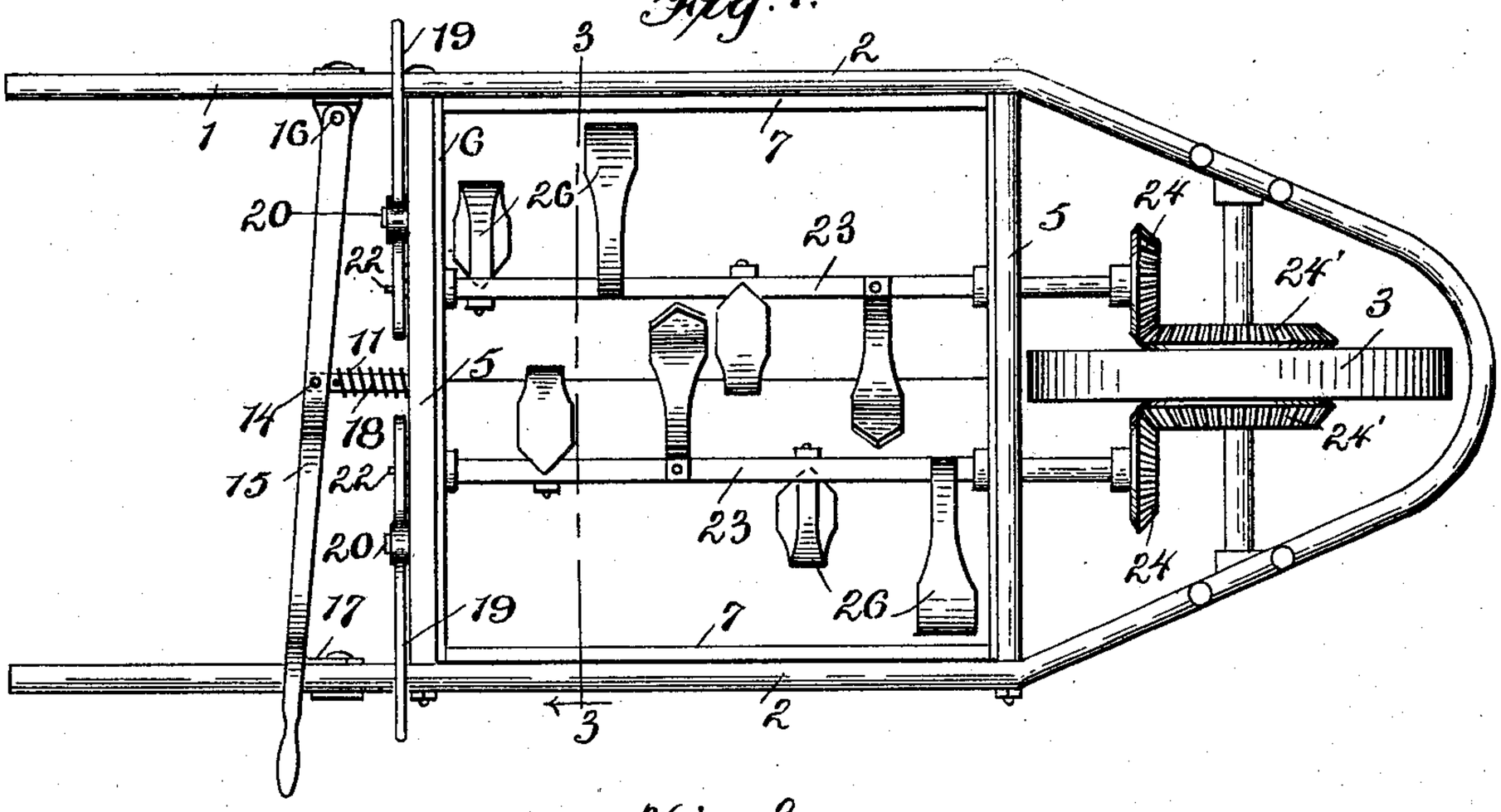

Fig. 2.

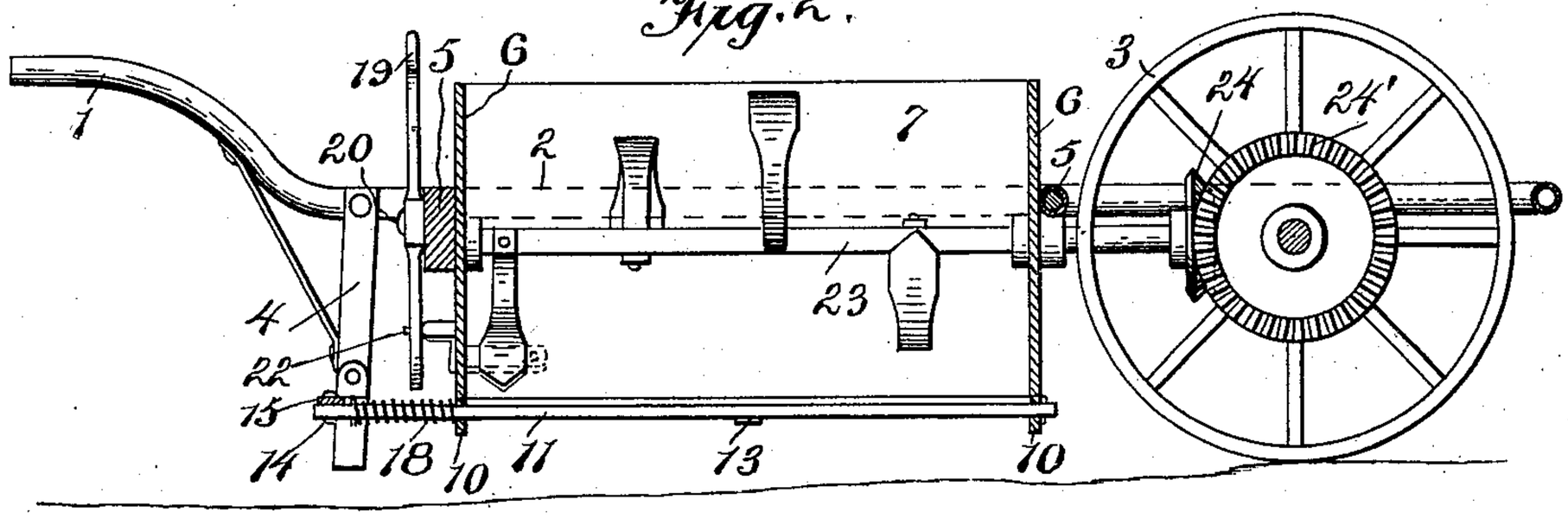

Fig. 3.

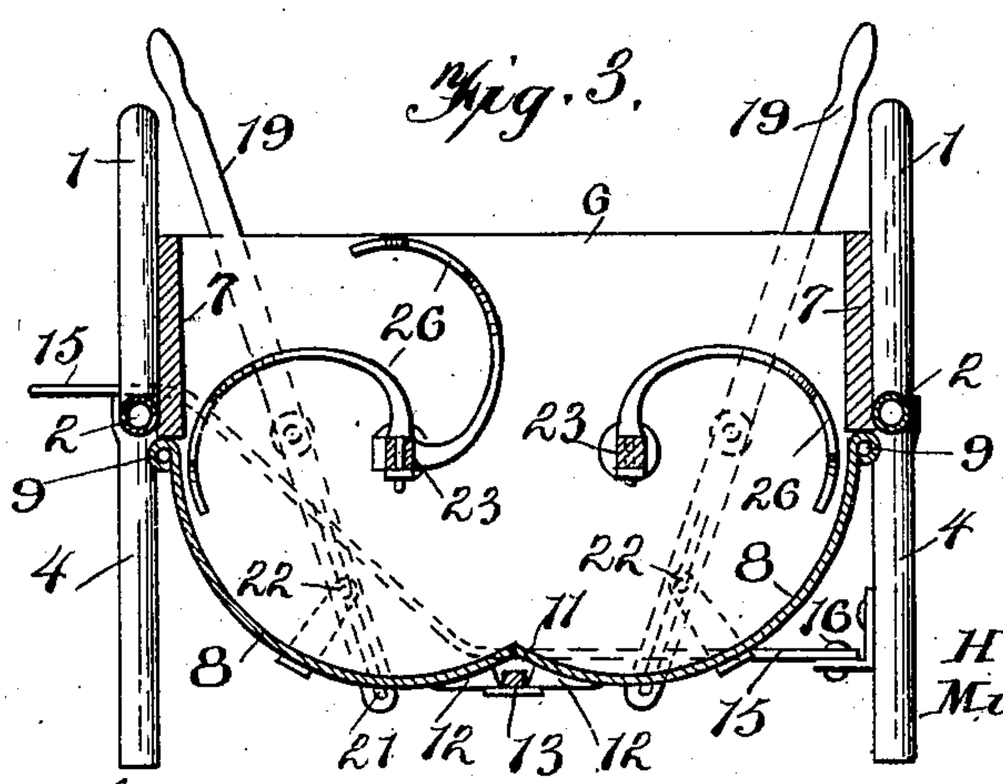

Witnesses

Geo. E. Frech.

E. R. Peck

Inventors

Hugh J. Phillips

Michael F. Guiney.

By Hubert E. Peck

Attorney

No. 711,524. Patented Oct. 21, 1902.

H. J. PHILLIPS & M. F. GUINEY.

CONCRETE MIXER.

(Application filed Feb. 20, 1902.)

(No Model.) 2 Sheets—Sheet 2.

Fig. 6.

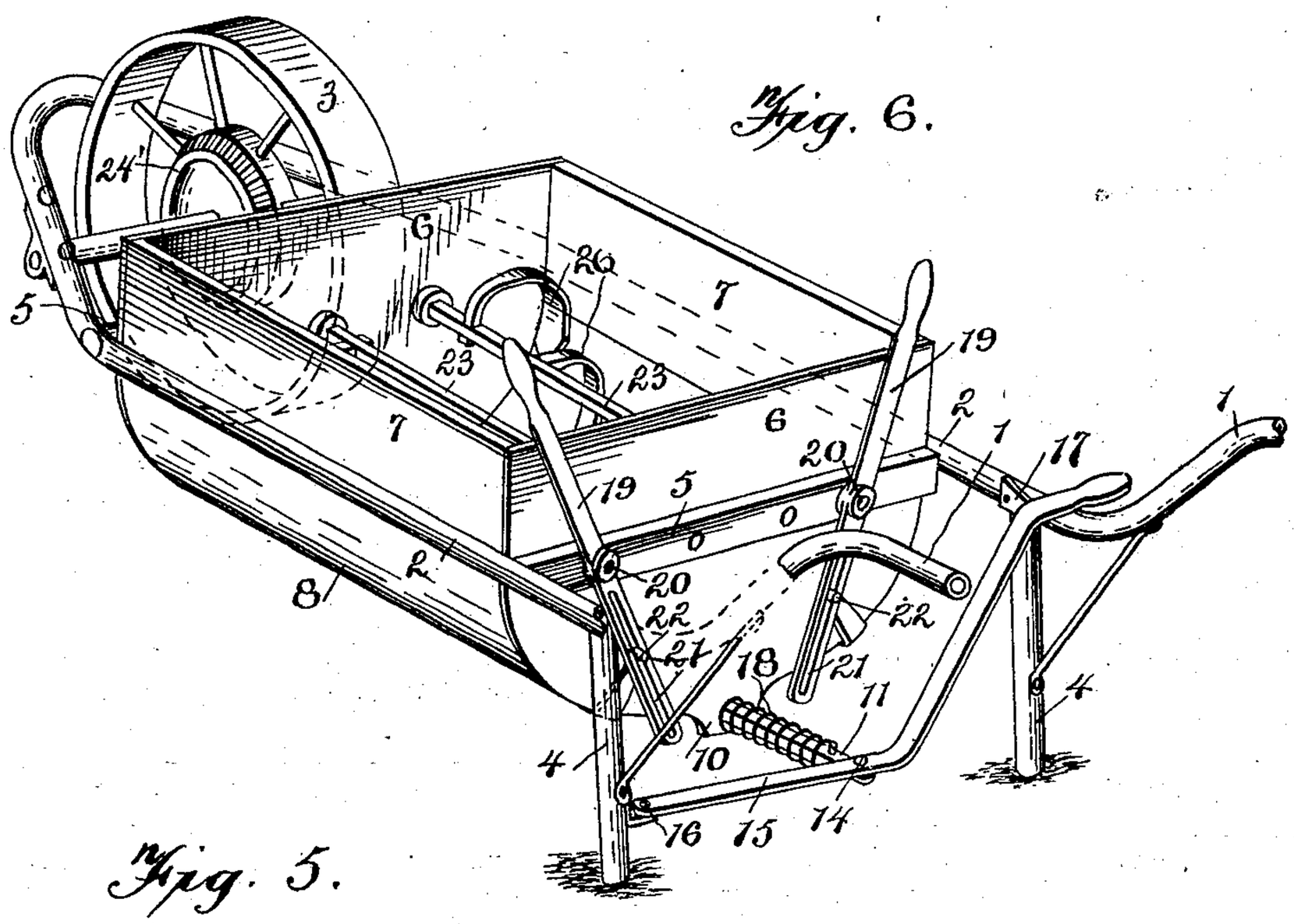

Fig. 5.

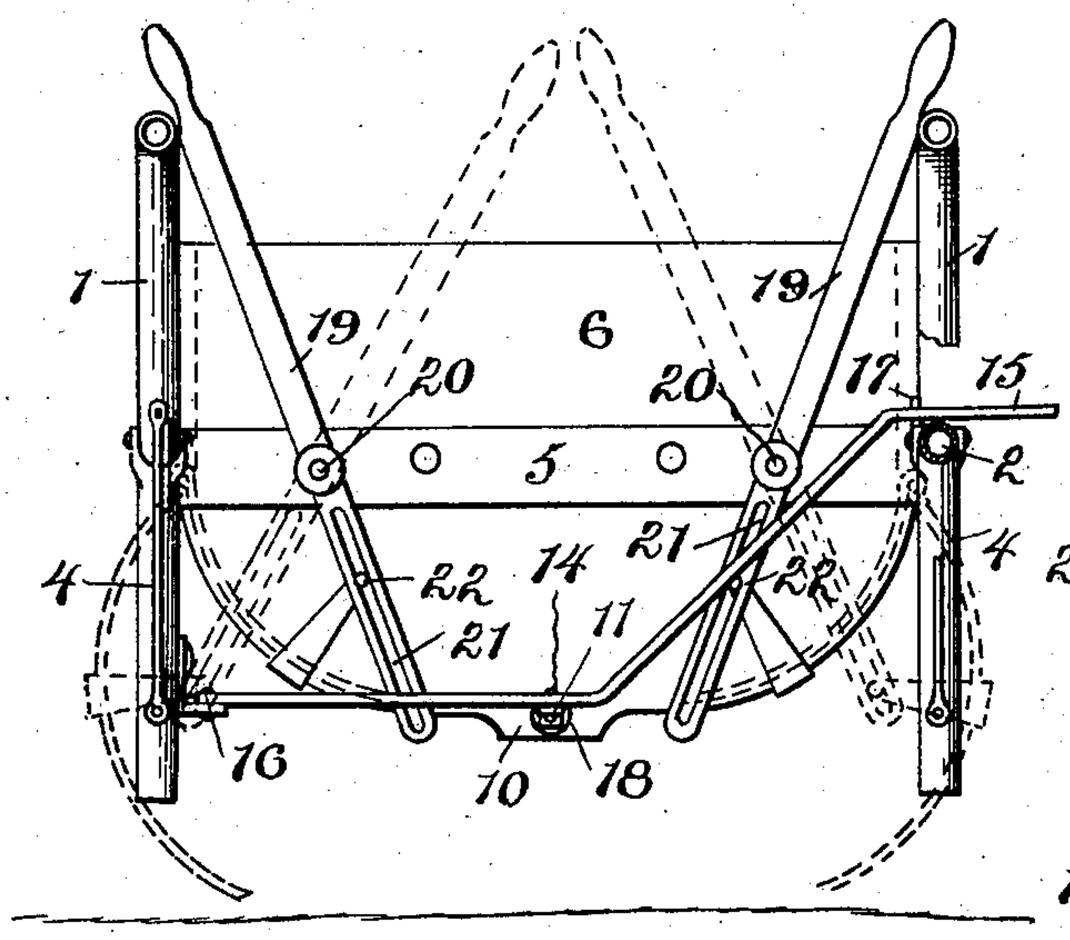

Fig. 4.

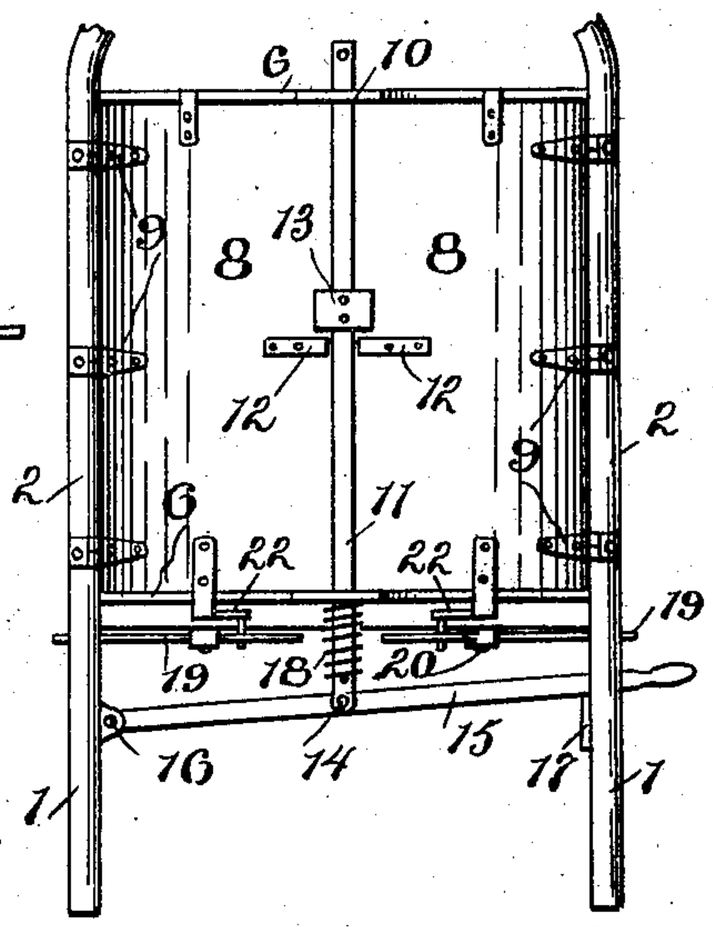

Fig. 7.

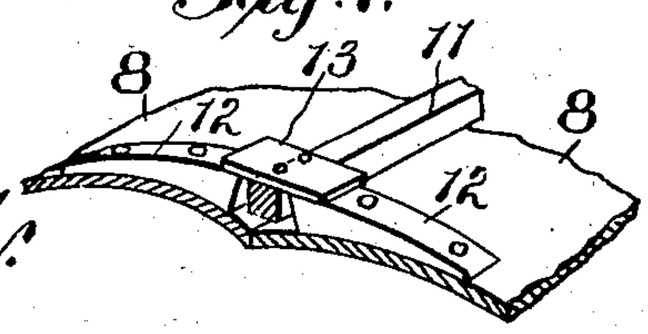

Witnesses

Geo. E. Frech.
E. R. Peck

Inventors

Hugh J. Phillips
Michael F. Guiney.

By Hubert E. Peck

Attorney

THE NORRIS PETERS CO., PHOTO-LITHO., WASHINGTON, D. C.

UNITED STATES PATENT OFFICE.

HUGH J. PHILLIPS AND MICHAEL F. GUINEY, OF WASHINGTON, DISTRICT OF COLUMBIA.

CONCRETE-MIXER.

SPECIFICATION forming part of Letters Patent No. 711,524, dated October 21, 1902.

Application filed February 20, 1902. Serial No. 94,948. (No model.)

To all whom it may concern:

Be it known that we, HUGH J. PHILLIPS and MICHAEL F. GUINEY, citizens of the United States, residing at Washington, District of Columbia, have invented certain new and useful Improvements in Concrete-Mixers; and we do hereby declare the following to be a full, clear, and exact description of the invention, such as will enable others skilled in the art to which it appertains to make and use the same.

This invention relates to certain improvements in what are generally termed "concrete" or "mortar" mixers, and more particularly to portable concrete-mixers; and the objects and nature of the invention will be readily understood by those skilled in the art in the light of the following explanations of the construction shown in the accompanying drawings merely as an example for purposes of explanation of one form from among others within the spirit and scope of this invention.

This invention consists in certain novel features in construction and in combinations and in arrangements of parts, as more fully and particularly set forth hereinafter.

A particular object of the invention is to provide what might be termed a "wheelbarrow" or portable wheeled receptacle or hand-vehicle to receive and transport the various ingredients employed in mixing concrete, cement, &c., and wherein these ingredients will be thoroughly mixed to produce the desired plastic compounds by the act or during the act of moving or wheeling the receptacle or vehicle from the points of location of the various ingredients to the point where the concrete is to be laid.

In preparing concrete for pavements, sewers, &c., the various ingredients are usually arranged in separate adjacent piles, and the desired proportions of the ingredients are thrown onto a platform and there mixed with the necessary proportion of water. Often wheelbarrows are employed to carry the proper portions of ingredients separately to the mixing board or platform. After the ingredients are properly compounded the resulting mixture must usually be shoveled into wheelbarrows and moved to the point where the concrete or other plastic compound is being placed or the concrete-work is being laid. Even where heavy and expensive horse-drawn mixers, "bugs," or pugs are employed the various ingredients are first otherwise transported, usually in wheelbarrows, to a mixing-board and there partially mixed and then shoveled into the pug, which holds a comparatively large quantity. It is then necessary by reason of the large quantity of material in the pug to drive the same for a considerable distance in order to properly mix and compound the ingredients. The pug then dumps the resulting compound, and wheelbarrows are usually again brought into use to transport the mixture to the point where the work is being done, which is in nearly every instance inaccessible to the pug or horse-drawn large heavy mixer. Concrete-work carried on under such conditions usually requires the presence of a considerable number of wheelbarrows and several of the expensive horse-drawn mixers or pugs in addition to the mixing-board and number of workmen with shovels to deposit the materials on the board and mix and reduce the same to a plastic condition before it is ready to be shoveled into the mixer or pug.

As before stated, this invention contemplates a wheelbarrow or comparatively small wheeled receptacle which can be propelled, directed, and dumped or unloaded by a single workman, and which can be wheeled from pile to pile to separately receive the proper ingredients and water and can then be wheeled to the point where the cement or other plastic compound is to be laid, and which will thoroughly mix and compound the ingredients while being thus conveyed, so that when dumped at the point where the cement-work is being laid the compound is in condition for immediate application to the pavement, wall, filling, &c., under construction.

Referring to the accompanying drawings, which show merely for purposes of explanation one form as an example from among other constructions within the spirit and scope of the invention, Figure 1 is a top plan of the device. Fig. 2 is a longitudinal section. Fig. 3 is a cross-section taken on the line 3 3, Fig. 1. Fig. 4 is a reduced bottom plan view, portions being broken away, the bottom shown

closed, but the locking-slide shown in a released or dumping position to release the clam-shells. Fig. 5 is an end view, full lines showing the bottom closed, dotted lines showing the same open. Fig. 6 is a perspective view of the machine, parts being broken away. Fig. 7 is a detail perspective view looking at the under sides of the clam-shells and showing the means for locking the same.

The wheeled receptacle, or what might be termed "wheelbarrow," is provided with any suitable strong and rigid framework, usually provided with rearwardly-projected rigid handles 1 1, which are usually parallel and separated, so that the operator is located between the handles, which he grasps, one with each hand, when uplifting the body of the receptacle and propelling the same. The arrangement in this respect in the specific example shown is the same as in the ordinary wheelbarrow. These handles are usually rigid with or, if desirable, form rigid rearward extensions of the two strong rigid longitudinal side bars or pieces 2 2 of the framework. These side bars are shown in the specific example extended forwardly to form the two rigid forward extensions about as in an ordinary wheelbarrow, between which the rolling support of the device is located in front of the body thereof. In the example shown, 3 is any suitable ground or supporting and driving wheel, provided with a horizontal axle extending between and suitably coupled to the front ends of said forward extensions. It is obvious, however, that the invention is not limited to the employment of a single front supporting-wheel.

4 4 are rear supporting-legs, which are usually arranged in rear of the receptacle and depending from the handles or side bars about as shown, so that the device is upheld by the front wheeled support and said rear legs when in its normal position at rest.

5 5 are rigid cross bars or pieces between the side bars 2 2 of the device and located at the front and rear ends, respectively, of the receptacle or body, which is located between the side bars.

6 6 are the rigid vertical end walls of the receptacle, extending from side bar to side bar and usually secured to said end bars. 7 7 are the rigid portions of the side walls of the receptacle, extending between said ends and along the inner faces of and usually secured to said side bars. The lower edges of the end walls 6 6 are usually curved or rounded from one side wall 7 to the other side wall 7 to conform to the curvature of the swinging, dumping, or "clam-shell" bottom of the receptacle.

The bottom of the receptacle is formed of two longitudinal sections or clam-shells 8 8, which meet along their lower or inner longitudinal edges. This bottom extends from side wall to side wall and from end to end of the receptacle to completely close the bottom thereof, and the two sections, halves, or clam-shells forming said bottom are preferably similar in respect to size and shape and lap under and tightly fit the under curved edges of the end walls. The clam-shells along their outer longitudinal edges are hinged at 9 at the lower longitudinal portions of the side walls 7 7, so that the clam-shells can swing vertically inwardly and upwardly to bring their inner edges together and close the bottom and outwardly and upwardly to dump the contents of the receptacles. Each clam-shell is preferably so curved transversely as to form an arc of a circle, and the two clam-shells are so arranged that when the bottom is closed the two arcs have differently-located centers and so that the inner meeting edges of the clam-shells are elevated about as shown in Fig. 3. Hence the bottom when closed preferably has the longitudinal central elevation, from which the bottom curves downwardly and outwardly in opposite directions, forming the two longitudinal depressions on opposite sides of said central elevation. From said depressions the bottom curves outwardly and upwardly to the fixed side walls. However, as at present advised, we do not wish to limit the invention to such specific features. Suitable devices are employed to lock the clam-shells in position to close the bottom of the receptacle and support the material being mixed therein. Various mechanisms can be employed for this purpose. We show the end walls provided with central depending perforated ears, lugs, or supports 10 10, carrying a locking bar or slide 11, which is longitudinally movable through said parts 10 10 and is arranged centrally and longitudinally of the receptacle and close beneath the meeting longitudinal edges of the clam-shells, so that the said edges of the clam-shells will just clear said slide as the clam-shells open or close. Each clam-shell at one or more points, usually at about the central portions of its length, is provided on its under surface near its edge with a downwardly-enlarged portion, forming an abutment or stop-shoulder 12. This abutment or stop-shoulder can be formed by a block or metal strip rigidly secured on the face of the clam-shell or by other means or arrangements. The slide 11 is formed with lateral enlargements or ears 13 opposite said abutments 12 and arranged to project beneath them when the clam-shells are locked together. Said abutments then rest on said portions 13 13 of the slide, and the clam-shells are thereby supported and held in the closed positions, completely closing the bottom of the receptacle. In order to release the clam-shells and permit the same to dump, the slide is moved longitudinally to throw the portions 13 13 out of juxtaposition with the abutments 12 12. Thereupon the bottom will automatically dump, as the edges of the clam-shells can clear the slide and its portions 13, and the abutments 12 12 can clear the slide, excepting portions 13 thereof.

If desired, means can be provided for manipulating the locking and supporting slide and for actuating the same automatically in one direction. For instance, the rear end of the slide is shown extended rearwardly a distance beyond the end of the receptacle and pivotally joined at 14 to an intermediate portion of hand-lever 15, arranged transversely of the handle-bars and at one end fulcrumed at 16 to a rigid part of the frame and from thence extending in rear of the receptacle and having its handle end extending across and beyond the opposite handle-bar, which can be provided with a stop-shoulder or catch 17.

18 is an expansive spring coiled on the extended rear end of the slide and compressed between the lever 15 and the rear end of the receptacle. This spring constantly tends to move the slide longitudinally, preferably in a direction or to an extent which will hold portions 13 under the abutments of the clam-shells, and hence uphold and lock the bottom. The catch 17 is designed to engage the hand-lever 15 and hold the same and the locking-slide against the tension of said spring, with the slide in unlocked position with respect to the clam-shells, so that the clam-shells can be swung up to closed position without being stopped by said slide. The operator after the material in the receptacle has been mixed to the desired degree merely has to kick or with his foot push forwardly against the hand-lever 15 to swing the same forwardly until caught and held by the catch 17, whereupon the bottom will automatically drop open and dump the contents of the receptacle. The operator while he has both hands applied to the handles, and thus occupied in upholding the wheelbarrow, can hence easily cause the contents of the receptacle to be dumped by striking said hand-lever with his foot.

Fig. 4 shows the position of the lock when the lever 15 is held by catch 17. The catch holds the slide in this position, so that the clam-shells can be swung back to closed position, and while they are held in closed position the operator releases lever 15 from catch 17 and spring 18 automatically returns the slide to locking position, as shown in Figs. 3 and 7. The spring and catch can be otherwise arranged—for instance, to operate oppositely—as the spring might hold the slide unlocked and the catch hold the slide locked.

Means are preferably employed in the specific example illustrated for swinging the clam-shells closed and holding them in such position until locked by the locking-slide and also, if necessary, for the purpose of forcibly swinging the clam-shells outwardly to a completely-reversed position or back and forth until they are completely emptied or possibly strike against the side bars of the frame to jar the shells and shake and empty all of the cement or concrete therefrom which might otherwise adhere thereto. For instance, for this purpose we might employ two upright hand-levers 19 19 at the rear of the receptacle and fulcrumed at 20 20 to the rear cross-bar and extended upwardly to form handles and extended downwardly in rear of the rear wall of the receptacle and each longitudinally slotted at 21. Each clam-shell is provided with a rearwardly-extending bracket or arm 22, loosely extending into the slot 21 of a lever 19. A lever can be provided for each clam-shell, and the levers swing vertically in a plane transverse to the length of the receptacle—that is, in a plane parallel with the plane in which the clam-shells swing. When the upper ends of the levers are swung toward each other, the clam-shells are swung outwardly and upwardly. When the levers are swung in the opposite directions, the clam-shells are swung inwardly and closed together. By means of these levers the clam-shells can be forcibly swung and shaken and jarred to free the same of adhering concrete, cement, &c., and to close the same together and to hold the same closed until locked by the slide. However, various arrangements of levers or other operating means can be employed for manipulating the clam-shells and, if desired, for locking them closed, and as at present advised it is not desired to limit the invention to the disclosure in this connection.

The receptacle is provided with stirring or mixing devices operated or actuated by the front supporting or ground wheel of the wheelbarrow. For instance, one or more stirrer-shafts can be employed extending longitudinally throughout the length of the receptacle and geared to the ground-wheel and provided within the receptacle with suitable stirring blades or arms. In the specific example illustrated two parallel shafts 23 23 extend throughout the length of the receptacle and are mounted in suitable boxes at the ends thereof. The shafts are extended forwardly and provided at their front ends with beveled gears 24 24, arranged on opposite sides of the supporting-wheel and meshing with the double bevel-gearing 24′, rigid therewith. The arrangement is such that the shafts are rotated in opposite directions as the ground-wheel revolves, with the stirrer arms or blades moving inwardly and upwardly over the central portion of the bottom of the receptacle and downwardly and inwardly at the opposite side portions of the receptacle. Each shaft 23 is provided with a series of stirrer blades or arms 26. Each blade 26 is preferably strongly and rigidly constructed of metal and at its inner end rigidly secured to the shaft and projecting approximately radially therefrom and usually curved longitudinally in the direction of rotation of the shaft. The blades of each shaft are arranged in a series around the same throughout the length of the receptacle, so as to successively pass into action on the material in the receptacle. In other words, the second blade from one end of the receptacle can extend from the shaft at an angle of ninety degrees to the axis of the

first blade and the third blade at the same angle with respect to the second blade, and so on. The blades are preferably so arranged as to just clear the opposite shaft and also just clear and sweep along the upper surfaces of the clam-shells. Each shaft is located about centrally above a clam-shell, and the curvature of the clam-shell is approximately an arc of the circular path traveled by the blades of the shaft above said shell. It will also be observed that the blades sweep inwardly across the clam-shells and tend to work the material to the longitudinal center of the receptacle. Also the curvature of the blades is intended to cause them to act as what might be termed "lifting buckets or shovels" to lift the material from the center of the receptacle and then drop it, thereby greatly aiding in the quick and thorough mixing and compounding of the ingredients and avoiding wedging or jamming of the material along the center of the receptacle and between the vertical planes of the two shafts. Comparatively small quantities of the various ingredients are placed in the receptacle, so that the traction of the supporting-wheel is amply sufficient to easily and most efficiently operate the mixing-shaft as the wheelbarrow is moved from the distributing-points of the sand, gravel, cement, water, broken stone, &c., or other ingredients to the work under construction and the exact point where the mixed compound is needed. The operator can then tilt and reverse the device and dump the mixture therefrom through the open top thereof as the ordinary wheelbarrow is reversed and dumped, or he can operate the clam-shells to dump the contents as hereinbefore fully pointed out. Each clam-shell forms a depression, as hereinbefore described, and the comparatively small quantity of water introduced into the receptacle, if not all absorbed before it reaches the bottom, will settle in said depressions until absorbed, and hence there is no particular necessity of an absolutely tight joint between the meeting edges of the clam-shells.

Various arrangements of mixing devices can be employed driven from the supporting wheel or wheels of the receptacle, and we do not wish to limit ourselves to the specific arrangement of mixing-shafts, blades, and gearing disclosed in the specific example.

Our invention contemplates, among other features, a hand-moved wheeled open-top receptacle of the wheelbarrow type (whether or not the receptacle is provided with a dumping-bottom) provided with a longitudinal mixing-shaft driven from and rotated by the supporting-wheel.

If desired, the teeth might be transversely beveled or inclined to throw the material in the receptacle longitudinally thereof and the teeth might be oppositely beveled to throw the material back and forth, and straight or otherwise-formed teeth might be employed on one or more shafts; also, the slide-lock might be dispensed with and the hand-levers 19 provided with a lock or locks to hold the bottom closed; also, a permanently-closed bottom might be employed and the receptacle be dumped by reversal or tilting.

It is evident that various changes and modifications might be resorted to in the forms, constructions, and arrangements of the parts described without departing from the spirit and scope of this invention. Hence it is not desirable to limit the invention to the construction disclosed.

Having thus fully described our invention, what we claim as new, and desire to secure by Letters Patent of the United States, is—

1. A concrete-mixer comprising a wheeled receptacle of the wheelbarrow type having an open top, a rotary shaft extending through the receptacle and provided with mixer-blades therein, and driving-gearing between said shaft and the supporting-wheel of the receptacle, substantially as described.

2. A concrete-mixer comprising a receptacle provided with rearwardly-extending handles and a front supporting ground-wheel, a rotary shaft arranged in said receptacle and provided with mixing devices therein, said shaft extended forwardly and geared to and driven by said ground-wheel, substantially as described.

3. A concrete-mixer comprising an open-top receptacle to receive the various ingredients provided with two rearwardly-extending separated rigid lifting and directing handles and with a rigid forward extension, a rolling ground-support mounted in said forward extension, a rotary stirring and mixing device within the receptacle, and driving-gearing between the same and said rolling support, substantially as described.

4. A concrete-mixer comprising a wheeled receptacle of the wheelbarrow type provided with a rotary mixer-shaft extended longitudinally therethrough and extended forwardly and geared to the supporting-wheel, substantially as described.

5. A concrete-mixer comprising a wheeled receptacle of the wheelbarrow type provided with a dumping-bottom and a mixing device arranged in the receptacle and geared to and driven by a supporting-wheel, substantially as described.

6. A concrete-mixer comprising a wheeled receptacle having a pair of parallel mixer-shafts mounted therein and geared to and driven in opposite directions by a supporting-wheel, said shafts provided with longitudinally-curved lifting mixer-blades, substantially as described.

7. A wheeled supported concrete-mixer comprising a receptacle having a dumping-bottom comprising two curved swinging clam-shells, locking and operating devices therefor, and a rotary mixer in the receptacle and geared to and driven by a supporting-wheel, substantially as described.

8. In combination, a receptacle having

rigid rearwardly-extending handle-bars and a front rolling ground-support, said receptacle provided with a curved floor or bottom, and horizontal rotary shafts arranged longitudinally in the receptacle and geared to and driven by said rolling support and provided with mixing-blades sweeping said floor, substantially as described.

9. In combination, a wheeled receptacle having a dumping-bottom comprising two curved clam-shells hinged at their outer upper edges to the receptacle and meeting at their inner longitudinal edges along the longitudinal center of the bottom, means for locking and operating the clam-shells, and mixer-shafts arranged above the clam-shells and geared to a supporting-wheel to rotate in opposite directions, substantially as described.

10. In combination, a wheeled receptacle having its dumping-bottom composed of swinging clam-shells, a spring-actuated lock holding said clam-shells closed, means for actuating said lock against its spring, hand devices for swinging said clam-shells, and a mixer in said receptacle operatively connected with a wheel-support, substantially as described.

11. A mixer comprising a wheeled receptacle having a dumping-bottom, a spring-held lock therefor, a hand-operated device for closing the bottom, and a rotary mixing device in the receptacle and geared to a supporting-wheel, substantially as described.

12. A mixer comprising a wheeled receptacle having fixed end and side walls and a dumping-bottom comprising swinging clam-shells hinged at said side walls and meeting along their upwardly-curved inner edges to form a central elevated portion along the dumping-bottom, a lock to hold the clam-shells closed, and means for swinging said clam-shells, substantially as described.

13. A mixer comprising a wheeled receptacle having a dumping-bottom comprising swinging clam-shells meeting along their inner edges, a sliding bolt beneath said meeting edges to hold the clam-shells closed, means for operating said bolt, means for swinging the clam-shells, and a mixing device in the receptacle, substantially as described.

14. A mixer comprising a frame, a receptacle having rigid walls and a dumping-bottom comprising swinging sections, each with a rigid projection, hand-levers fulcrumed to the frame, and operatively connected with said projections to swing said sections forcibly, and a mixing device in said receptacle operatively connected to a supporting-wheel, substantially as described.

15. In a mixer, in combination, a frame having handle-bars and a front supporting-wheel, and provided with a receptacle having a dumping-bottom comprising hinged sections, a bolt normally holding said sections closed and provided with a spring tending to move the bolt in one direction, and means accessible from the rear and normally holding said bolt against the tension of the spring so that the operator can release the same with his foot, substantially as described.

16. In a mixer, in combination, a wheeled receptacle provided with a bottom comprising swinging clam-shells, a sliding bolt beneath the meeting edges of the clam-shells and having lateral enlargements, said clam-shells having abutments to engage said enlargements and lock the clam-shells closed, a spring pressing said bolt in one direction, a hand-lever for moving the bolt against the tension of the spring and a catch to hold the hand-lever and bolt against the tension of the spring, substantially as described.

17. A mixer comprising an open-top receptacle having rearwardly-extending handle-bars, rear legs, and a front supporting-wheel, and a mixing device operatively connected with said wheel, substantially as described.

In testimony whereof we affix our signatures in presence of two witnesses.

HUGH J. PHILLIPS.
MICHAEL F. GUINEY.

Witnesses:
GEO. E. FRECH,
E. R. PECK.