BEST AVAILABLE COPY

No. 698,884. Patented Apr. 29, 1902.

G. A. WHEELER.

HINGE.

(Application filed Apr. 13, 1900.)

(No Model.) 2 Sheets—Sheet 1.

FIG. 1.

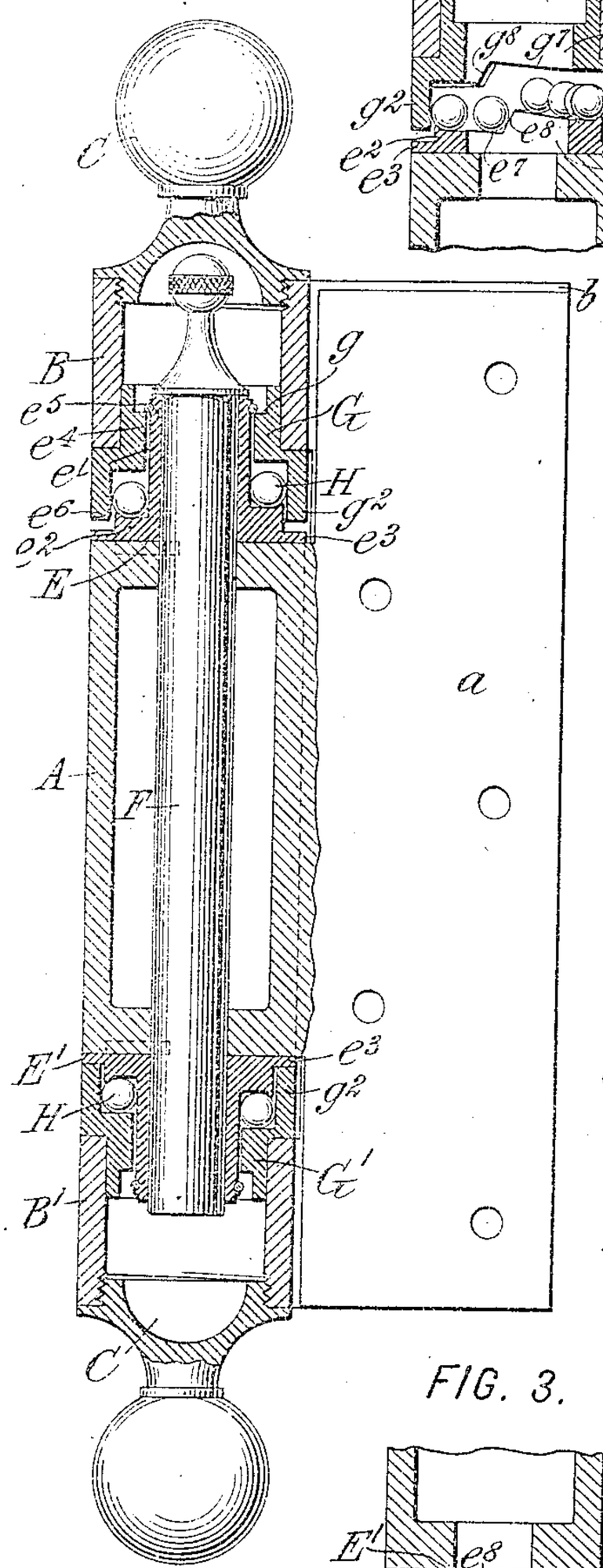

FIG. 2.

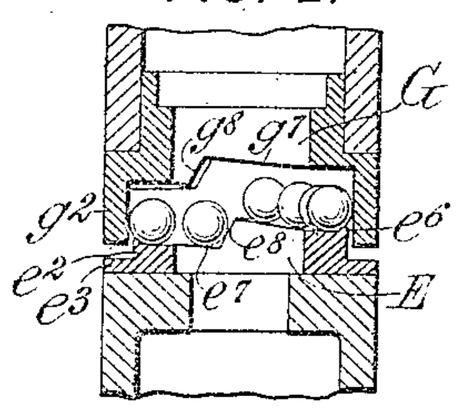

FIG. 4.

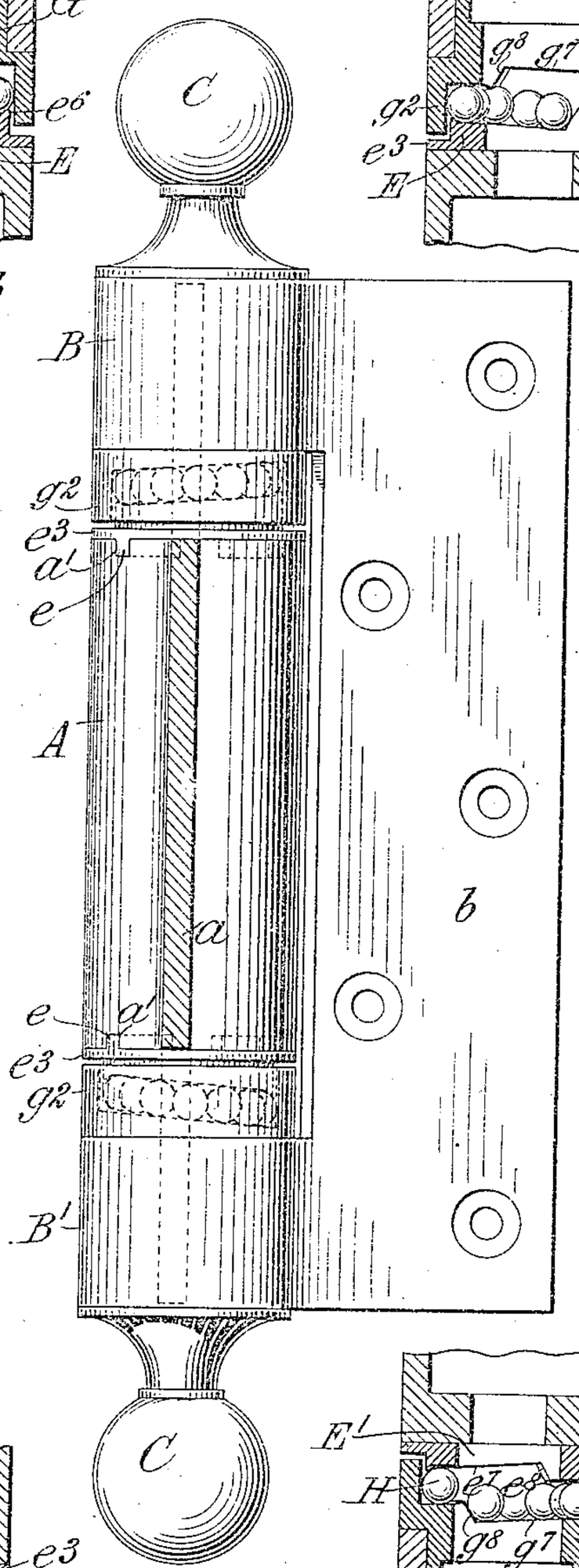

FIG. 5.

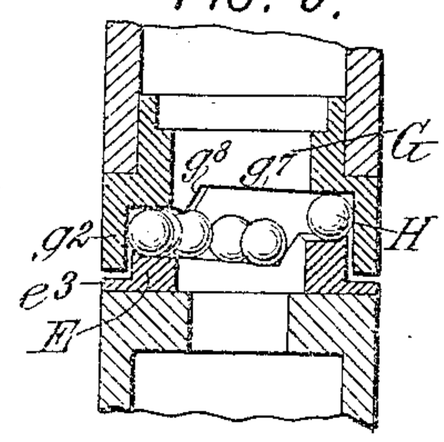

FIG. 3.

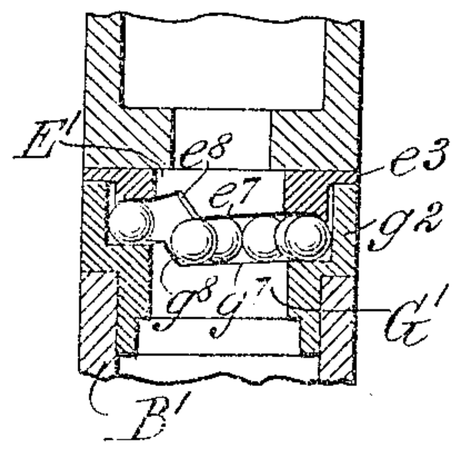

FIG. 6.

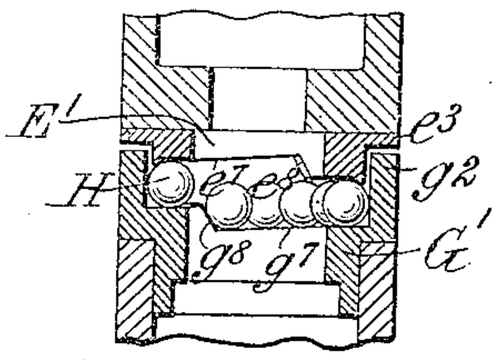

WITNESSES:

Fred Whitey

Rene' Bruine

INVENTOR:

George A. Wheeler,

By Attorneys,

Albert T. Frazer & Co.

No. 698,884.

Patented Apr. 29, 1902.

G. A. WHEELER.

HINGE.

(Application filed Apr. 13, 1900.)

(No Model.)

2 Sheets—Sheet 2.

FIG. 10.

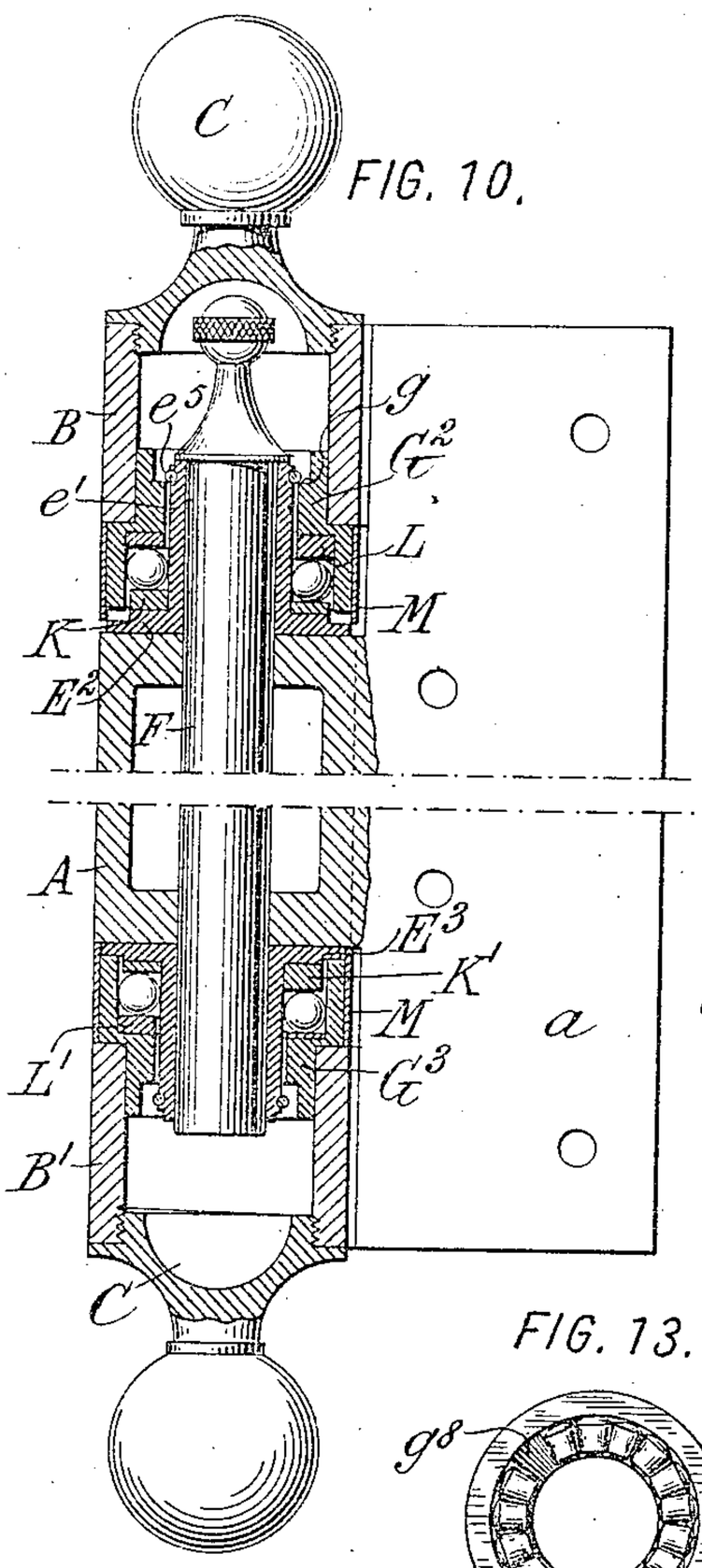

FIG. 11.

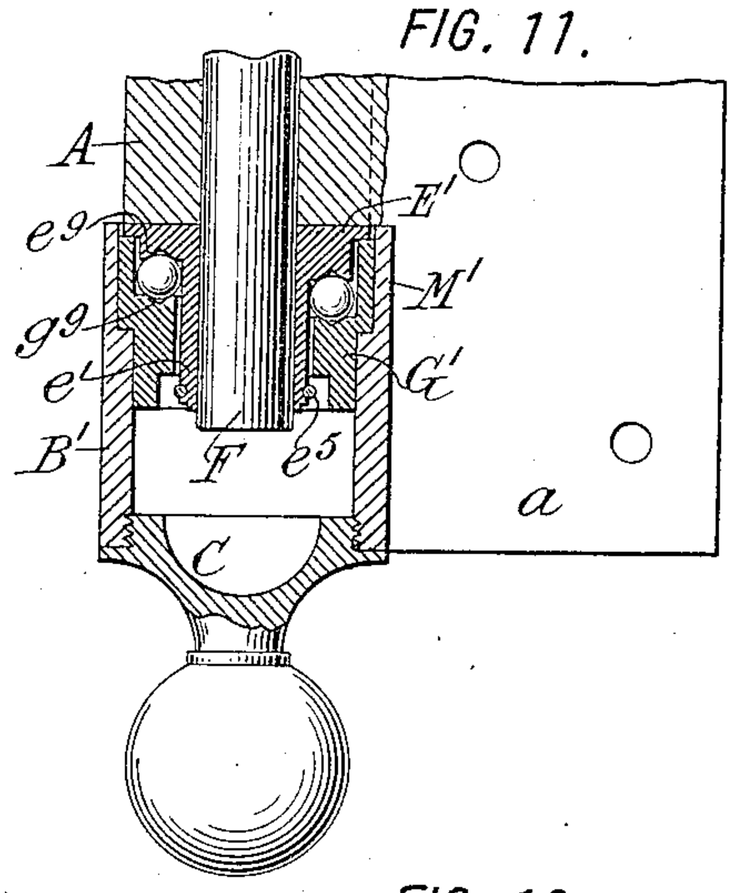

FIG. 12.

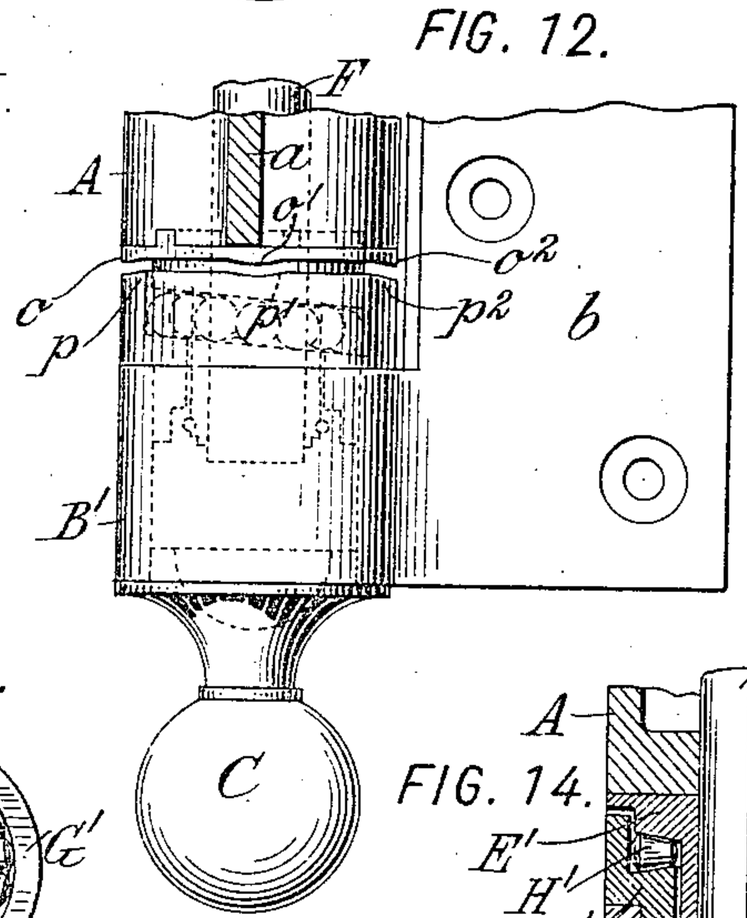

FIG. 13.

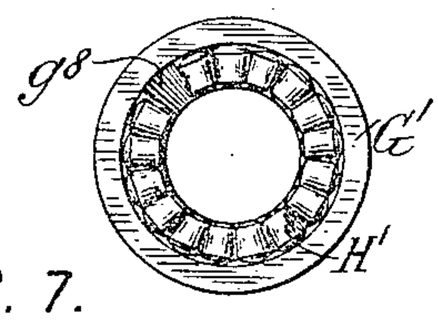

FIG. 14.

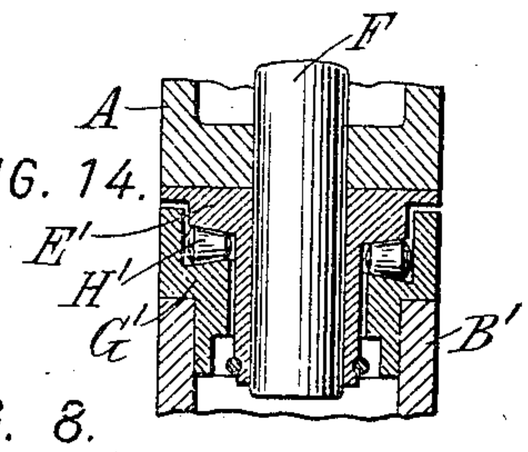

FIG. 7.

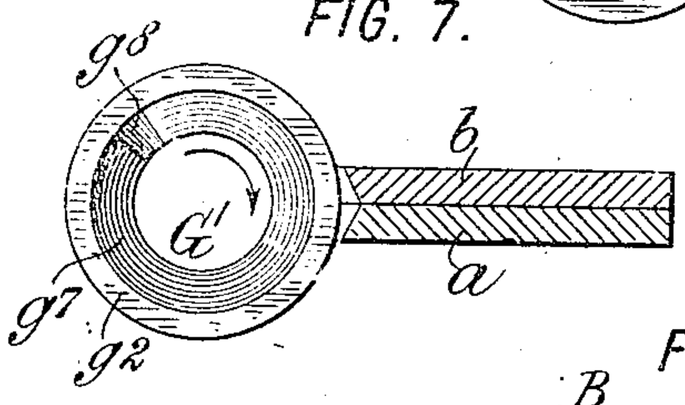

FIG. 8.

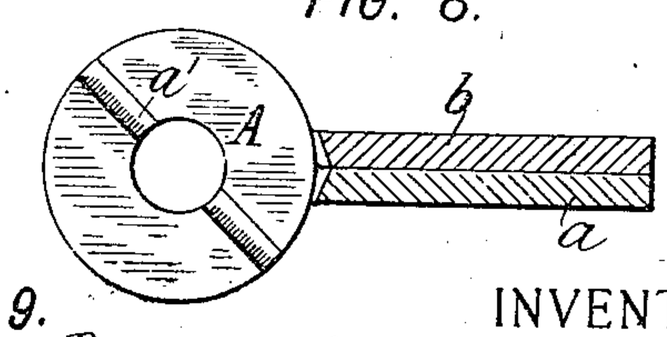

FIG. 9.

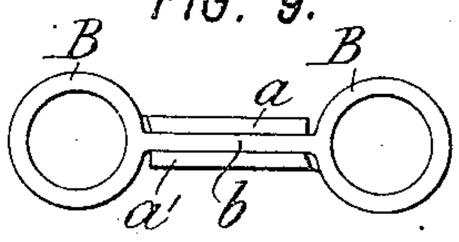

WITNESSES:

Fred Whitey

René Bruine

INVENTOR:

George A. Wheeler,

By Attorneys,

Arthur C. Fraser & Co.

UNITED STATES PATENT OFFICE.

GEORGE A. WHEELER, OF NEW YORK, N. Y.

HINGE

SPECIFICATION forming part of Letters Patent No. 698,884, dated April 29, 1902.

Application filed April 13, 1900. Serial No. 12,682. (No model.)

To all whom it may concern:

Be it known that I, GEORGE A. WHEELER, a citizen of the United States, residing in the city, county, and State of New York, have invented certain new and useful Improvements in Hinges, of which the following is a specification.

My invention provides a hinge of the type known as "door-hinges," whether applied to doors or other structures, and adapted to close automatically. It provides also a hinge which is equally adapted to doors opening to the right or to the left—that is, a universal hinge. It provides also a hinge having various other advantages, all of which will be set forth in the following specification.

In the accompanying drawings, showing practical embodiments of my invention, Figure 1 is a vertical section through the knuckles in the closed position—that is, with the leaves together—the door being supported from the intermediate knuckle. Figs. 2 and 3 are sections through the upper and lower bearings, omitting the core of the male member or cone, showing the positions of the inclined tracks when the parts are in the position of Fig. 1. Fig. 4 is an elevation in the open position. Figs. 5 and 6 are sections similar to Figs. 2 and 3 through the upper and lower bearings in the position of the parts shown in Fig. 4. Fig. 7 is a plan of the lower knuckle with its female bearing member or cup in place. Fig. 8 is a plan of the intermediate knuckle. Fig. 9 is a plan of a double-acting hinge made according to my invention. Fig. 10 is a vertical section at one knuckle of such double-acting hinge, the section at the other knuckle being identical. Fig. 11 is a vertical section, and Fig. 12 a vertical elevation, of modifications; and Figs. 13 and 14 are a plan and vertical section, respectively, of another modification.

The principal elements of the hinge shown are a pair of leaves, knuckles supporting said leaves and turning on or with a central pin, said knuckles having their adjacent end faces inclined, so that the weight of a door or the like tends to turn the two leaves toward each other. Preferably, also, there is a ball or other antifriction bearing between said inclined faces, so as to remove all frictional resistance to the automatic closing movement.

Referring to the drawings, A is an intermediate knuckle carrying the leaf *a*.

B and B′ are upper and lower end knuckles, respectively, carrying the leaf *b*.

C represents end caps screwed or otherwise fastened to the outer ends of knuckles B and B′.

At opposite ends of the knuckle A are bearing-cones or male members E and E′, the faces adjacent to the knuckle having thereon projections, such as ribs *e*, Figs. 4 and 8, adapted when the parts are assembled to enter corresponding recesses, such as grooves a', in the ends of the knuckle A and fix said bearing members and knuckle against rotation relative to each other. The body of each of said bearing members is composed of a core e', a track e^2, and a flange e^3 of substantially the same diameter as the knuckle. The core is hollow to admit a pin F, which passes also through the knuckle A and prevents lateral displacement of said knuckle relatively to said bearing members. Said core e' also projects with a good working fit through and slightly beyond a shoulder on an opposite bearing member, hereinafter described, and is provided near its outer end with a circumferential groove e^4, in which is sprung a ring e^5 of spring metal. Said ring is of sufficient thickness to extend slightly over the shoulder on said opposite bearing member, and thereby form a detachable stop to prevent the member E from falling out when the pin F and knuckle A are withdrawn. A slight vertical clearance is allowed between said ring and said shoulder for a purpose hereinafter set forth.

The track e^2 has an inclined face e^7 formed in a simple spiral and extending practically entirely around said track. Joining the opposite ends of said face e^7 is an abrupt incline e^8. The relative lengths of the inclines e^7 and e^8 are the same as those of g^7 and g^8. (Shown in Fig. 7.) In the hinge shown in Figs. 1 to 6 the inclination of the faces e^7 in the two bearing members E and E′ is in opposite directions, being downward in the direction of the arrow in Fig. 7 for the upper member and upward for the lower member.

Set in the inner ends of the knuckles B and B′ are female bearing members or cups G and G′, which may be integral with said knuckles,

but are preferably separate therefrom and fastened rigidly thereto, as by being forced into place with a tight fit. Each of these members has a hollow body surrounding the core of the corresponding male member and shouldered, as at g, to retain said male member in place by means of the spring-ring e^5. Each of said members has also a track having an inclined face g^7 g^8, similar in inclination and direction to the faces e^7 e^8 of the corresponding male member. Extending beyond said tracks so as to surround said male member in any position of the parts are members g^2. The end faces of these members g^2 are preferably level, as are the faces of the members e^3 of the corresponding cone, and said members g^2 are of such length as to bear on the opposite face e^3 immediately before reaching the closed position of the hinge, but to be moved away from said face e^3 in the opening movement by reason of the inclined tracks. Carried between the opposing tracks are a series of balls H sufficient in number to give an even bearing all around and to allow the door to turn automatically and with practically no friction to the closed position. Considering only the lower bearing, as shown in Fig. 3, the weight of the door being carried by the leaf a, and therefore by the knuckle A, and Fig. 3 representing the closed position of the parts, if said knuckle A be turned toward the position of Fig. 4 it will be lifted by the inclined tracks e^7 and g^7, assisted by the balls. To allow for this upward movement, a certain amount of longitudinal play of the knuckle A between the knuckles B and B′ is permitted. The amount of this play is one-half the distance between g^2 and e^8 in the upper bearing, Fig. 1, and is equal to the elevation produced in about one-fourth of the length of the inclined tracks e^7 and g^7. The knuckle being bodily lifted through this distance and, in addition, the upper track e^7 being turned to elevate certain of the balls the same distance, a space double the vertical play of the knuckle must be allowed between the balls and the upper track g^7. Such a space will permit the door to open through a right angle before being stopped by the upper bearing. On releasing the door, the weight being still on the lower bearing, the incline e^7 slides down the incline g^7, the level faces of the members g^2 and e^3 of the lower bearing coming together immediately before the final closed position is reached (see Fig. 1) and forming a frictional stop or brake, which prevents slamming of the door. When the door is fully open, as will be seen by Fig. 6, only one-quarter of the balls are not under load, and as the door closes these balls also come under the load, so that in the closed position the entire race of balls is under load, Fig. 3. By arranging the leaf a substantially opposite or one-eighth of a revolution to the rear of the shoulder e^8, as indicated by Fig. 7, (e^8 and g^8 being substantially coincident,) the door when in the open position is opposite the free balls—that is, the balls between the shoulders g^8 and e^8, Fig. 6. It thus results that the balls engaged by both the opposite bearing-faces—the active balls—are on the side of the bearing nearest to the door, where the stress of the combined weight and canting effect is a maximum. The same advantage is present if the balls be omitted, the greater bearing-surface being at the point of maximum pressure. The bearings may be so placed relatively to each other that the points where the balls are not under load will be on opposite sides in the two bearings. The upper bearing take the canting stress only, and since it is the balls adjacent to the swinging leaf that takes this stress I prefer to place this bearing so that the abrupt incline connecting the lowest and highest points of the spiral track will be opposite the swinging leaf, as this leaves the balls free at this point to climb the abrupt incline. The position is shown in Fig. 7. The hinge may be arranged to open farther than a quarter-turn, if desired, this being regulated by the length of the middle knuckle A. Thus if the middle knuckle be shortened, the bearing members E being unaltered, the knuckle can turn through a greater arc before the balls in the upper bearing come into contact with the track of the fixed bearing member G and stop further movement. By lengthening the middle knuckle the opposite result is produced. When the door opens, it is stopped by the tracks, which, taken together, resemble a wedge, though there is no holding action. On the contrary, a rebounding action results and a closing impetus is given to the door. Although the door rises in opening, owing to the antifriction-bearings, the distance it needs to rise, even when set to swing through more than a quarter-turn, is so slight that the clearance necessary between the top of the door and the jamb is not noticeable. Moreover, the door can be made to settle more tightly to the floor in the closed position than a door swinging exactly horizontally, thus excluding drafts. My hinge, therefore, while requiring but little effort to open it, will yet close the doors promptly, automatically, and without slamming. By reason of the antifriction-bearings it will stand long wear and in the construction shown in Fig. 1 is universal—that is, equally adapted to doors opening to the right or to the left. When supported by knuckle A, (see Figs. 4, 5, and 6,) the door evidently swings to the right as it opens. When it is desired that the door swing to the left, the hinge is simply inverted and knuckle A, with the door attached, and pin F are then inserted right side up, as before. The lower bearing takes the entire downward stress due to the weight of the door and the upper bearing the canting stress only. This the latter is able to do despite the slight looseness in the bearing when it is closed or nearly closed, since this play is not sufficient to allow the balls to get out of place. Of course the upper bearing

might be used to take the load and the lower the canting strain by suspending the door from the leaf *b*; but inasmuch as it is desirable that the bearings remain on the jamb, since they would be liable to injury if removed with the door, I prefer to hang the door to knuckle A and place knuckles B B′, to which the bearings are attached, upon the jamb.

Fig. 9 shows a double-acting hinge constructed according to my invention, the middle leaf *b* being common to both single hinges and outer leaves *a* and *a′* being attached one to each single hinge and arranged to close automatically against said middle leaf *b*, the tips C being removed.

Since it is difficult to form the bearing members E G and E′ G′ with the trackways e^7 and g^7 directly thereon, I have shown a somewhat cheaper construction in Fig. 10, in which bearing members E^2 G^2 and E^3 G^3 are formed with level faces, and track members K L and K′ L′ are formed with a level face to fit accurately on the level faces of G^2, E^2, G^3, and E^3 and with an exposed track-face, which is inclined to correspond with the tracks e^7 e^8 g^7 g^8 of Figs. 1 to 6. In the construction shown here the upper and lower bearings are inclined in the same direction, so that the automatic closing is effected in only one direction and different hinges will be needed for right and left hand doors. This form may be used in double-acting hinges, since each part of the double hinge is required to swing in one direction only, and one may be right and the other left and the hinge still be universal. No vertical play of the balls in either pair of tracks is needed, since the two bearings rotate reciprocally, the lower member of the upper bearing turning with the upper member of the lower bearing, whereby the lower bearing is closed when the hinge is closed, and the upper bearing is opened through an arc equal to the arc through which the other bearing is to open with the door; also, when the door opens the upper bearing shuts as the lower bearing opens, taking up all lost motion. The distance the door is to open is determined by the setting of the upper bearing and the length of the intermediate knuckle A.

Although, as shown in Fig. 1, the bearing is inclosed, and hence is practically free from dust, yet in order to prevent entirely the entrance of dust between the adjacent edges of said bearing members I may use a dust-ring attached to one of said knuckles and projecting over the end of the opposite knuckle to such a distance as to close the space between said knuckles in every position of said parts. For example, in Fig. 10 I show separate dust-rings M, attached to the knuckles B and B′ in any suitable way, as by forcing them on with a close fit and projecting over the outer edge of the bearing members E^2 and E^3. The bearing members E^2 E^3 and G^2 G^3 are made of less diameter than the knuckles, so that the outer surface of the ring coincides with that of the knuckles and produces a pleasing finish. Moreover, while the bearings are preferably of hardened metal, as steel, the dust-rings may be of any metal—as, for instance, bronze—to match bronze leaves and knuckles.

Fig. 11 shows a construction in which the knuckle itself forms the dust-ring M′, the knuckle being recessed and the bearing set in such recess. In this case the diameter of the middle knuckle is preferably less than that of the outer knuckles. Fig. 11 also shows a five-point contact for the balls, and it is to be understood that the usual variations in the amount of contact of the balls and tracks or races may be employed as in other ball-bearings. For instance, the tracks may fit the balls closely for an arc of their circumference by any desired variation of the track-section.

To take the weight of very heavy doors, I may substitute rollers H′ in place of balls, as shown in Figs. 13 and 14, the rollers being of course of a slightly-conical shape and the tracks of a suitable section to fit. I may also use a combination of alternate rollers and balls, with the rollers of a length slightly less than the diameter of the balls.

For outside-door hinges instead of the level-faced members g^2 e^3 of Figs. 1 to 11 I may form the corresponding members, as shown in Fig. 12, with interlocking projections *o o′* o^2, &c., and recesses *p p′* p^2, &c., having inclined faces and being preferably four in the entire circumference and spaced equidistantly. In the open position of the hinge these projections and recesses are clear of each other and inoperative. In closing the projections *o o′*, &c., are turned a quarter of a revolution and also lowered so that they drop into the recesses *p′* p^2, &c., and hold the door against the wind, and when it is desired to open it a slight extra pressure is required at first to start the door and move it through a small arc, when the balls come into play and the door swings easily, closing with the same ease.

In the form of hinge shown in Fig. 1 leaf *a* is preferably made as much shorter than leaf *b* as there is play in the bearings when closed. This is for the purpose of facilitating the fitting of the hinge to the door and jamb, as no matter which side up the hinge is the lower edges of the leaves will be flush in the closed position. In the other form, as shown by Fig. 10, since there is no looseness in the bearings the leaves are preferably of the same length.

In Figs. 1 and 2, e^6 is a ball-retaining ridge to facilitate the assembling of the parts if for any reason the upper bearing needs to be taken apart after it is attached to the door-jamb. This ball-retaining ridge may be omitted to facilitate the manufacture, as in Fig. 10, since a piece of paper wrapped around the edge of the track of the cone, to be withdrawn as soon as the balls are in place, answers the same purpose. The grooves g^9, Fig.

11, also permit of the ball-retaining ridge e^6 being omitted.

In assembling the parts the bearing members for the middle knuckle are inserted into the recesses in the end knuckles and the retaining-rings e^5 forced over the ends of the cores and into the grooves e^4, thereby holding the bearing members together. The ribs e are then entered into the grooves a' of the middle knuckle and the latter pushed into its final position and the pin F set in place to hold it. As indicated by Figs. 7 and 8, the ribs and grooves are at such an angle that in the closed position of the hinge the abrupt incline e^8 on the bearing members E and E' will be approximately immediately opposite the corresponding abrupt incline g^8 on the end-knuckle bearing member, leaving just sufficient space for the balls to pass freely between said abrupt inclines.

Having described the functions of the various parts thereof, the operation of my hinge as a whole will be sufficiently clear to those skilled in the art.

In the construction of Figs. 1 to 6 it is noticed that either the lower bearing or the upper bearing alone takes the entire downward stress due to the weight of the door, while the opposite bearing takes the lateral or canting stress between the vertical portions of the two bearing members E and G or E' and G'. I thus reduce to a minimum the frictional resistance due to the downward stress and also that due to the canting stress.

In removing the door, with its knuckle, from the remainder of the hinge after the latter has been attached to the jamb it is often essential that it be moved in the direction of a line lying between its closed and its open position. Such is the case when there is a wall extending from the jamb in the direction of the opened door. By this wall the door with its detachable portion of the hinge is prevented from being moved in the direction of a line more than ninety degrees beyond its closed position, and since the upper edge of the door is lifted above the frame in opening it it is prevented by the frame from moving toward the frame to detach it. The position of the groove a' and its angle with respect to the leaf a (less than a quarter-revolution advanced beyond the line of said leaf) are such as to permit the detachment and reinsertion of the knuckle with the door attached thereto between the open and the closed positions of the door, whether it be a right or left hand opening door. The position of the rib e also is such as to reinforce the bearing member at its thinnest and weakest point. By reason of the looseness of the parts the door is more easily placed in position and the canting bearing is much freer than would be the case if it carried weight as well.

Though I have described with great particularity of detail a hinge embodying my invention, it will be understood that the various combinations and elements thereof are capable of considerable modification by those skilled in the art without departing from the spirit of my invention. For example, in the case of a hinge having five knuckles, three on one leaf and two on the other, the bearings might be between the opposite ends of the middle knuckle and the inner ends of the second and fourth knuckles. The latter are then outer knuckles relatively to the middle knuckle, which becomes the intermediate knuckle of my invention, or the bearings might be between the first and second knuckles and between the fourth and fifth, in which case the second and fourth knuckles together are the equivalent of the intermediate knuckle in the form shown.

What I claim, therefore, and desire to secure by Letters Patent, are the following-defined novel elements and combinations, all substantially as set forth:

1. In a hinge, the combination of a pair of knuckles, a cup or female track on one knuckle, a cone or male track on the other, said tracks being continuously inclined in one direction for more than a semicircumference, and antifriction devices extending for more than a semicircumference between said tracks.

2. In a hinge, the combination of an intermediate knuckle, a pair of outer knuckles, and inclined bearings between said intermediate knuckle and said outer knuckles, said bearings being inclined in opposite directions.

3. In a hinge, the combination of an intermediate knuckle, a pair of outer knuckles, and inclined antifriction-bearings between said intermediate knuckle and said outer knuckles, said bearings being inclined in opposite directions.

4. In a hinge, in combination, a knuckle having a shoulder, a bearing member having a core projecting beyond said shoulder and a detachable stop on said core adapted to hold said member in said knuckle.

5. In a hinge, in combination, a pair of leaves, a pair of knuckles on one of the leaves and an intermediate knuckle on the other, and a pair of bearings spirally inclined in opposite directions, between the inside faces of the pair of knuckles of one leaf and the adjacent faces of the intermediate knuckle of the other leaf, with a clearance between said pair of knuckles and said intermediate knuckle to allow the bearings to turn a suitable distance, one of the leaves being shorter than the other by an amount equal to the clearance in the bearings when the hinge is closed, whereby the two leaves will always be flush at one end when the hinge is either end up.

6. In a hinge, the combination of a pair of knuckles, an inclined bearing between said knuckles, and a pair of faces on the adjacent ends of said knuckles, said faces adapted to approach each other during the closing move-

ment and to come together immediately before the closed position is reached, thereby forming a frictional stop.

7. In a hinge, the combination of a pair of knuckles, an inclined bearing between said knuckles, and a frictional stop between said knuckles and adapted to act during the closing movement of said hinge and immediately before the closed position is reached.

8. In a hinge, the combination of a pair of knuckles, a pair of bearing members therefor, one of said bearing members being detachable from its knuckle, and means for detachably attaching said members to each other.

9. In a hinge, the combination of a bearing member G having a shoulder g, a corresponding bearing member E having a core e' projecting beyond said shoulder g and having a circumferential groove e^4 on said core, and a spring-ring e^5 fitting said groove and holding said member E in said member G.

10. In a hinge, the combination of a pair of knuckles, ball-tracks inclined continuously in one direction for more than a semicircumference at adjacent ends of said knuckles, and balls extending for more than a semicircumference between said tracks.

11. In a hinge, the combination of a pair of knuckles, bearings between said knuckles having tracks inclined continuously in one direction and making substantially a complete revolution, and antifriction devices between said tracks and extending over substantially the entire length thereof.

12. In a hinge, the combination of a knuckle, a bearing member at the end of said knuckle having a level face and a track member carried by said bearing member and having an inclined face.

13. In a hinge, the combination of a bearing member, a knuckle, and a corresponding projection and recess on said bearing member and knuckle, whereby said parts are detachable and attachable in a fixed relative position.

14. In a hinge, the combination of a hollow bearing member, a hollow knuckle, a corresponding rib and groove on said bearing member and knuckle, whereby said parts are attachable in a fixed relative position, and a pin passing through said parts whereby said parts are held together.

15. In a hinge, the combination of a pair of knuckles, a bearing member fixed in one of said knuckles, a second bearing member detachable from the other of said knuckles, and means for attaching said detachable bearing member to its knuckle.

16. In a hinge, the combination of a pair of knuckles, a bearing member fixed in one of said knuckles, a second bearing member detachable from the other of said knuckles, and means for attaching said detachable bearing member to its knuckle, so that said detachable bearing member will, when attached, be in a determined position relatively to said fixed bearing member.

17. In a hinge, the combination of a pair of knuckles, a bearing member fixed in one of said knuckles, its bearing-face being abruptly inclined at one point, a second bearing member detachable from the other of said knuckles and having a corresponding abrupt incline, and means for attaching said detachable bearing member to its knuckle so that said abrupt inclines will be approximately opposite each other in the closed position of said hinge.

18. In a hinge, the combination of a pair of knuckles, a bearing member fixed in one of said knuckles, a second bearing member detachable from the other of said knuckles, means for attaching said detachable member rotatively to said first member and means for attaching said detachable member to its knuckle.

19. In a hinge, the combination of a pair of end knuckles, an intermediate knuckle, bearing members fixed in said end knuckles, corresponding bearing members detachable from said intermediate knuckle, means for attaching said detachable members rotatively to their corresponding fixed members, and means for attaching said intermediate knuckle to said detachable members.

20. In a hinge, the combination of a pair of end knuckles B B', an intermediate knuckle A, fixed bearing members G and G' in said end knuckles, detachable bearing members E and E', means for placing said knuckle A and said members E and E' in a determined relative position, and a pin F passing through said intermediate knuckle and said detachable bearing members and holding the same together.

21. In a hinge, a pair of knuckles, a bearing between said knuckles consisting of a race for antifriction devices, the upper and lower tracks of said race being practically parallel and spirally inclined continuously for more than half of their circumference, and for the remaining distance consisting of an abrupt incline connecting the ends of the spiral, and antifriction devices in said race and extending for more than a semicircumference around the same.

22. In a hinge, a pair of leaves, knuckles on said leaves, and a pair of spirally-inclined bearings of equal pitch between adjacent pairs of coacting knuckles, said bearings being inclined in the same direction and adapted to rotate reciprocally, one closing when the other opens, and vice versa, thereby taking up all lost motion.

23. In a hinge, the combination of a pair of knuckles, an inclined bearing between said knuckles, and corresponding recesses and projections o, p, on the adjacent faces of said knuckles, said projections adapted to rest in said recesses in the closed position and to resist the initial opening movement.

24. In a hinge, the combination of a bearing member having a plane face, an opposite inclined face, and a rib e on said plane face

extending under the lowest point of said inclined face whereby said member is strengthened at its thinnest point.

25. In a hinge, the combination of a bearing member, a knuckle, a corresponding rib and groove on said bearing member and knuckle, and a leaf on said knuckle adapted to be attached to a door, said rib being advanced less than a quarter of a revolution beyond the line of said leaf.

26. In a hinge, the combination of a pair of spirally-inclined antifriction-bearings, the points at which said bearings are under load being on substantially opposite sides of said bearings, whereby substantially every point in the circumference of the axis of the hinge is under load at all times in one or the other of the bearings.

In witness whereof I have hereunto signed my name in the presence of two subscribing witnesses.

GEORGE A. WHEELER.

Witnesses:
DOMINGO A. USINA,
FRED WHITE.