No. 692,120. Patented Jan. 28, 1902.

G. F. CONNER.

REVERSIBLE VARIABLE SPEED GEARING.

(Application filed Mar. 11, 1901.)

(No Model.) 6 Sheets—Sheet 1.

Fig. 2.

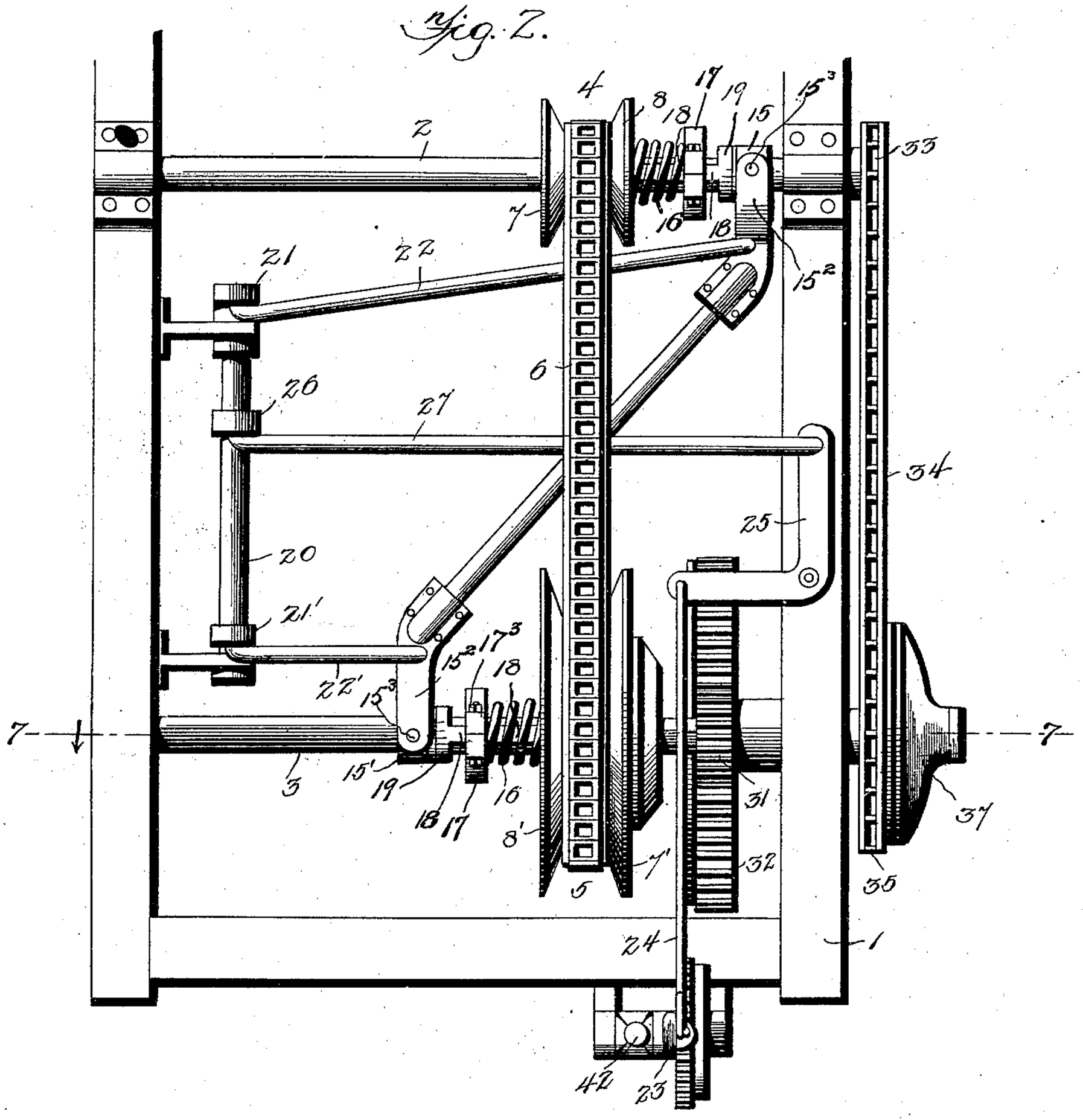

Fig. 8.

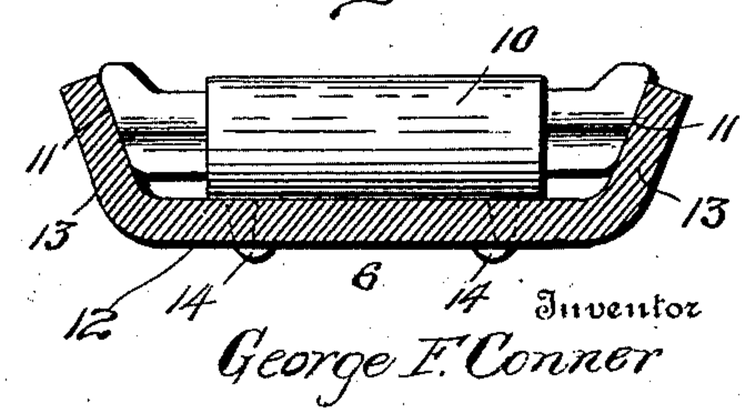

Inventor
George F. Conner

Witnesses
T. L. Mockabee
J. Albillson

By A. Albillson & Co
Attorneys

THE NORRIS PETERS CO., PHOTO-LITHO., WASHINGTON, D. C.

No. 692,120. Patented Jan. 28, 1902.

G. F. CONNER.

REVERSIBLE VARIABLE SPEED GEARING.

(Application filed Mar. 11, 1901.)

(No Model.) 6 Sheets—Sheet 2.

Fig. 1.

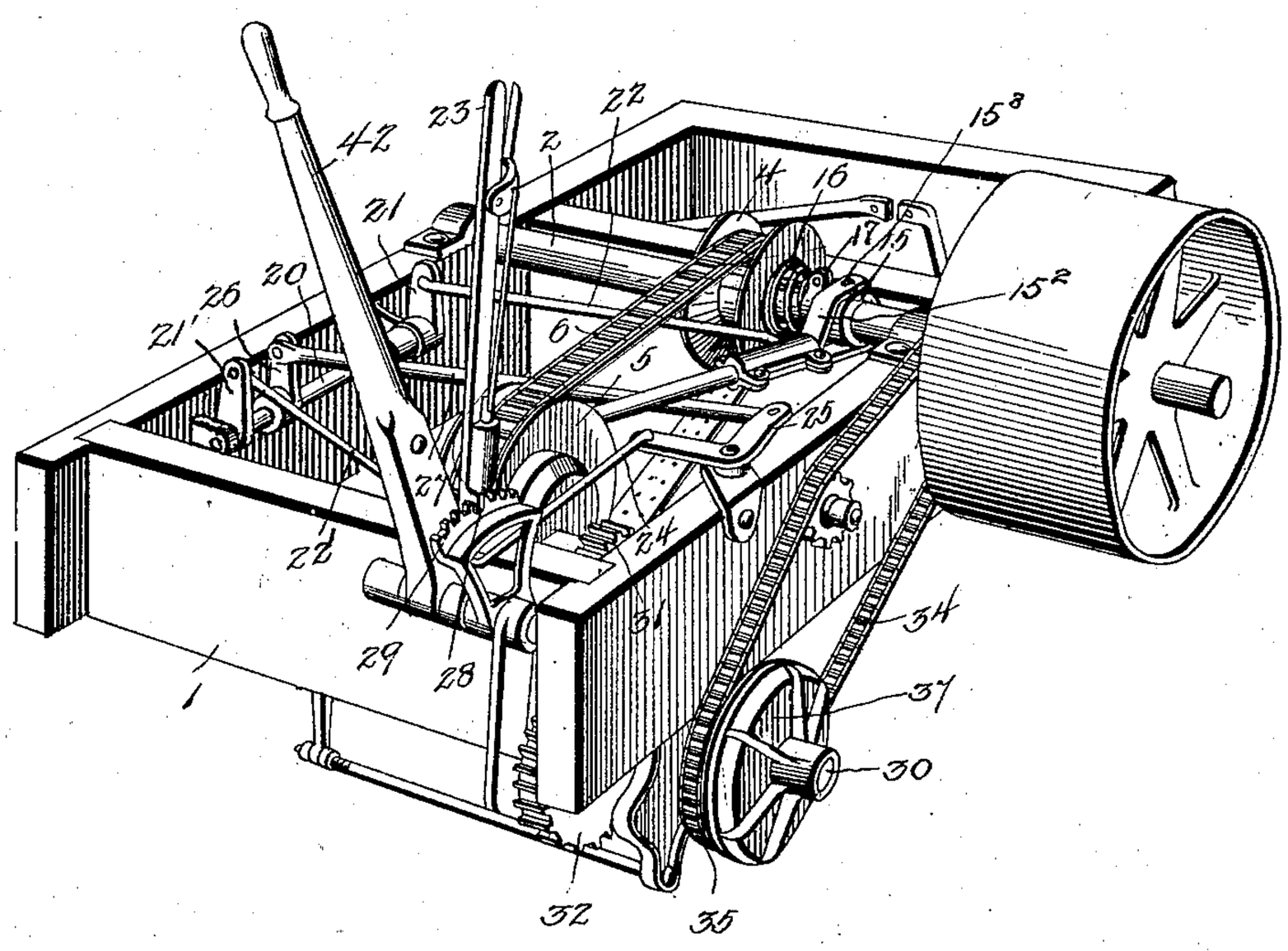

Witnesses:
T. L. Moorhouse
J. Robinson

Inventor
George F. Conner;
by A. D. Wilkinson & Co.
Attorneys

THE NORRIS PETERS CO., PHOTO-LITHO., WASHINGTON, D. C.

No. 692,120. Patented Jan. 28, 1902.

G. F. CONNER.

REVERSIBLE VARIABLE SPEED GEARING.

(Application filed Mar. 11, 1901.)

(No Model.) 6 Sheets—Sheet 3.

Fig. 3.

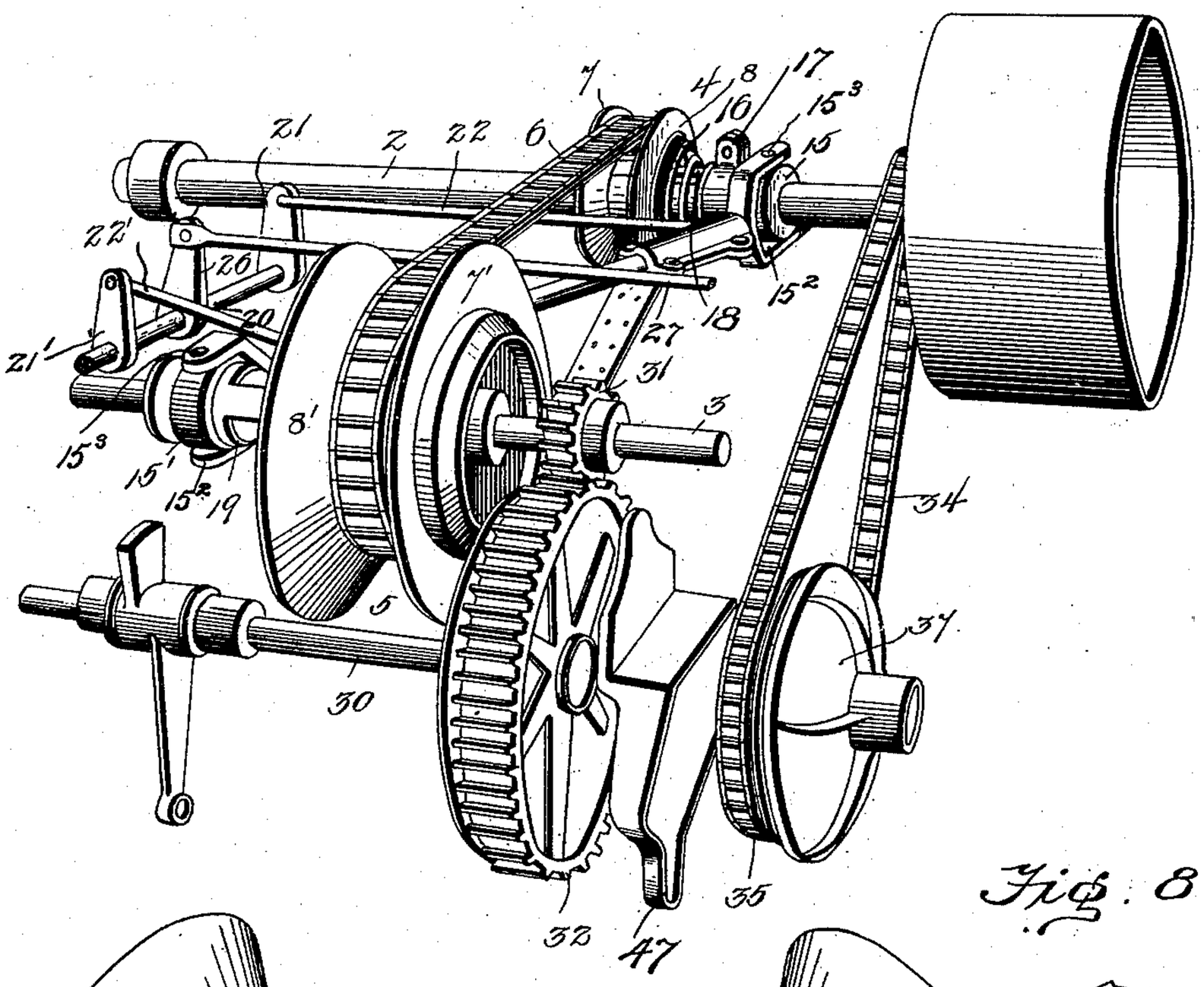

Fig. 8.

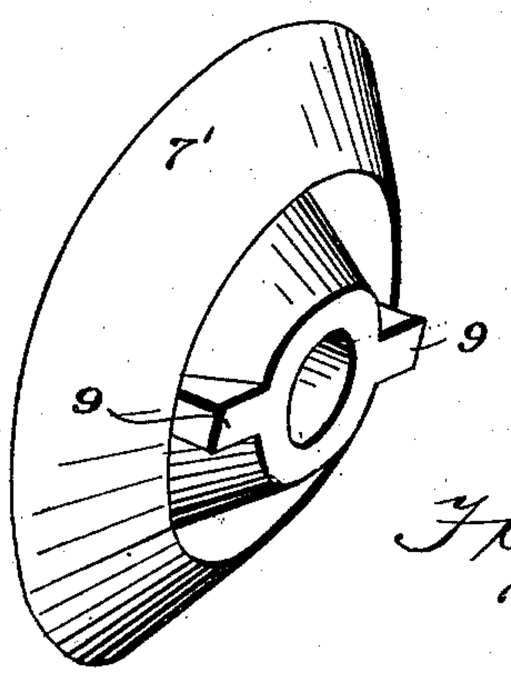

Fig. 8a

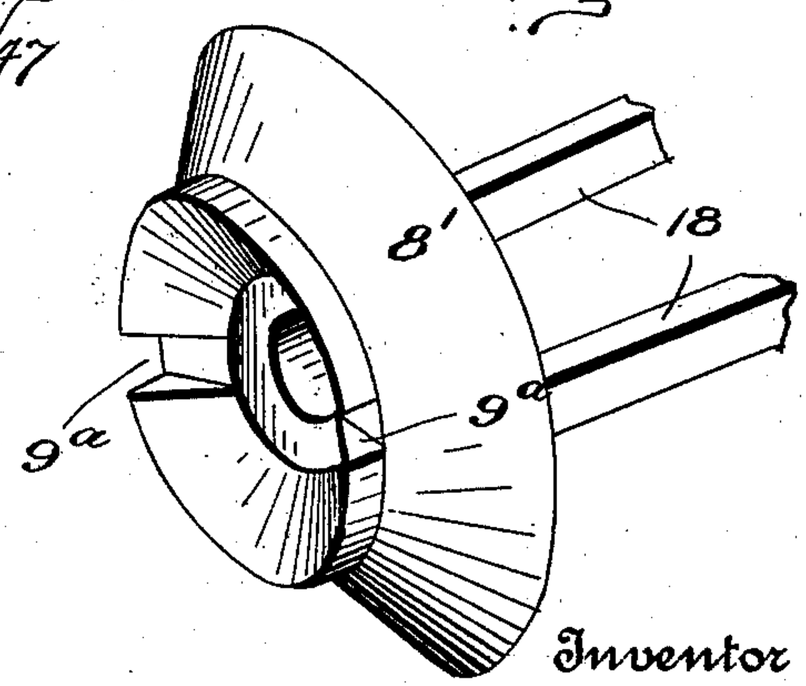

Witnesses
T. L. Moorhouse
J. Abbellson

Inventor
George F. Conner,
by H. Burton Vea
Attorney

THE NORRIS PETERS CO., PHOTO-LITHO., WASHINGTON, D. C.

No. 692,120.

Patented Jan. 28, 1902.

G. F. CONNER.

REVERSIBLE VARIABLE SPEED GEARING.

(Application filed Mar. 11, 1901.)

(No Model.)

6 Sheets—Sheet 4.

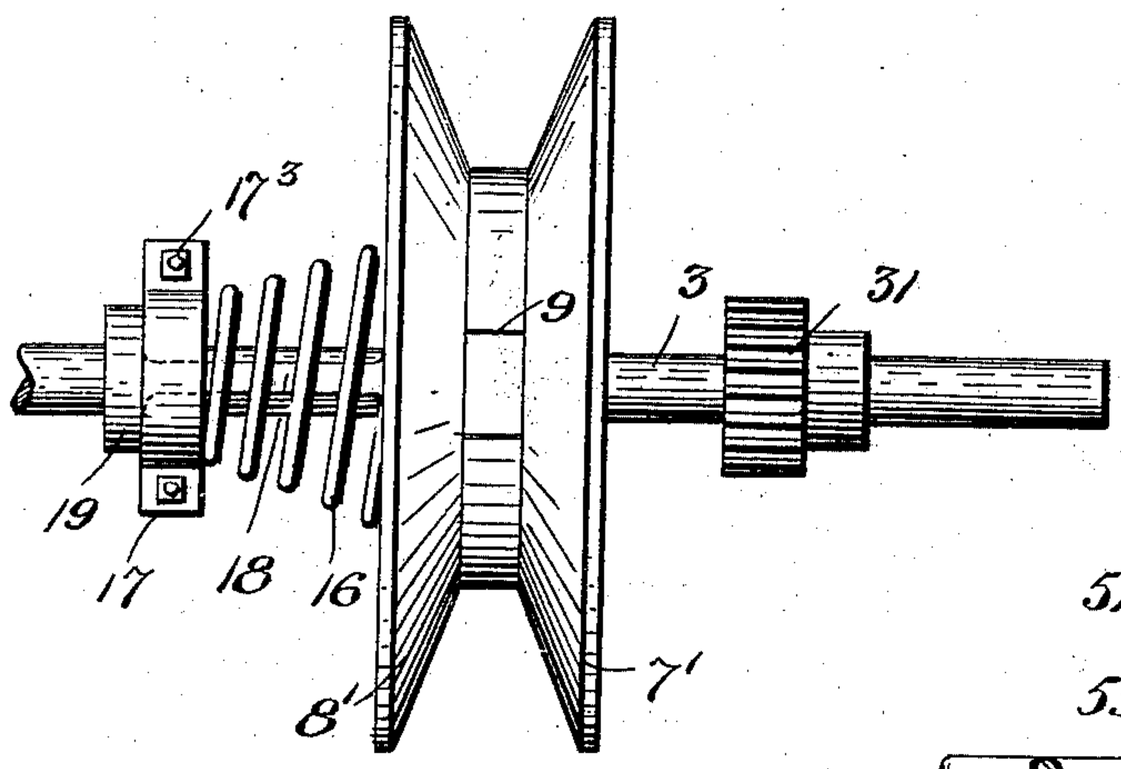

Fig. 4.

Fig. 10.

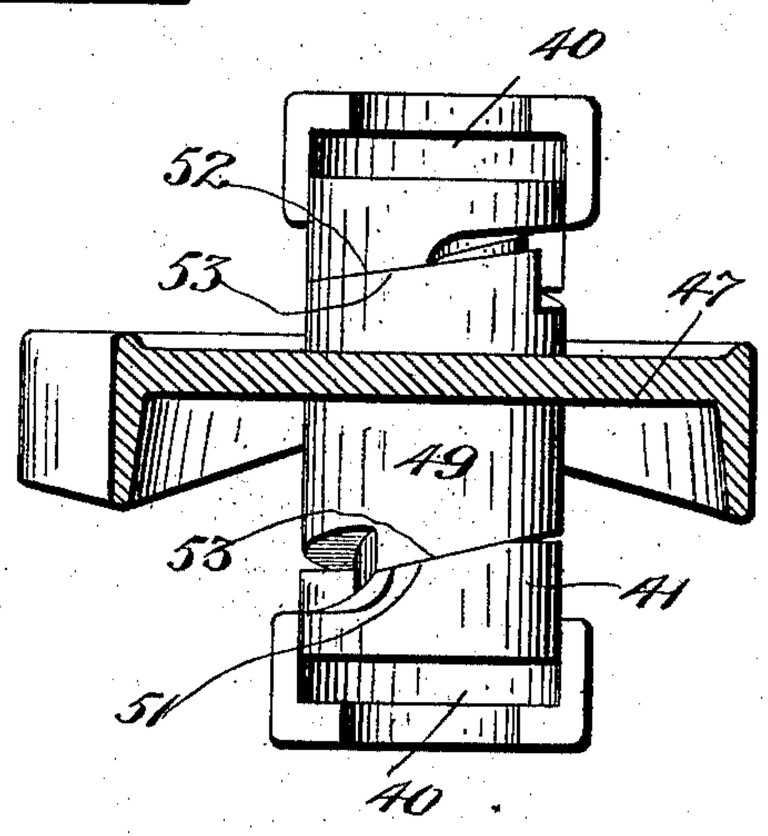

Fig. 5.

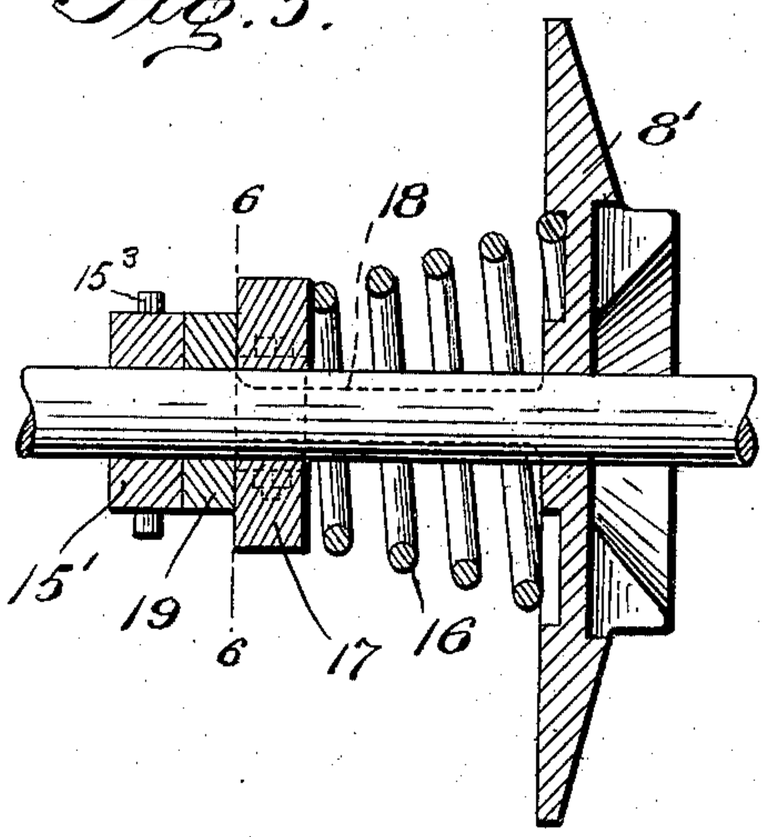

Fig. 6.

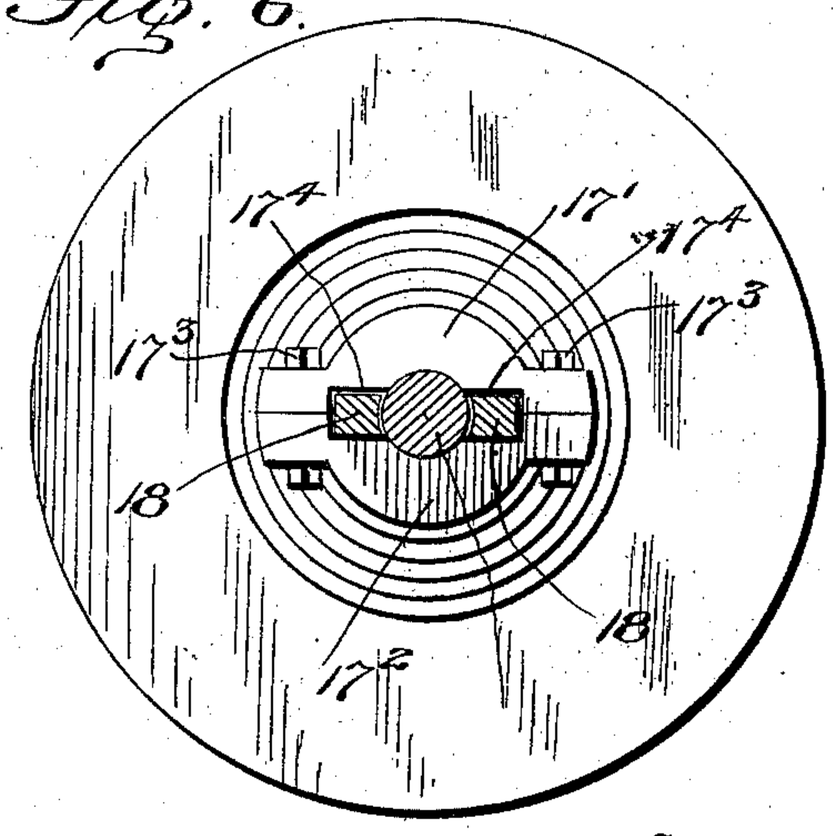

Inventor
George F. Conner

Witnesses
J. A. Griesbauer, Jr.
J. Albison

By H. Wilson & Co.
Attorneys

THE NORRIS PETERS CO., PHOTO-LITHO., WASHINGTON, D. C.

No. 692,120. Patented Jan. 28, 1902.

G. F. CONNER.

REVERSIBLE VARIABLE SPEED GEARING.

(Application filed Mar. 11, 1901.)

(No Model.) 6 Sheets—Sheet 5.

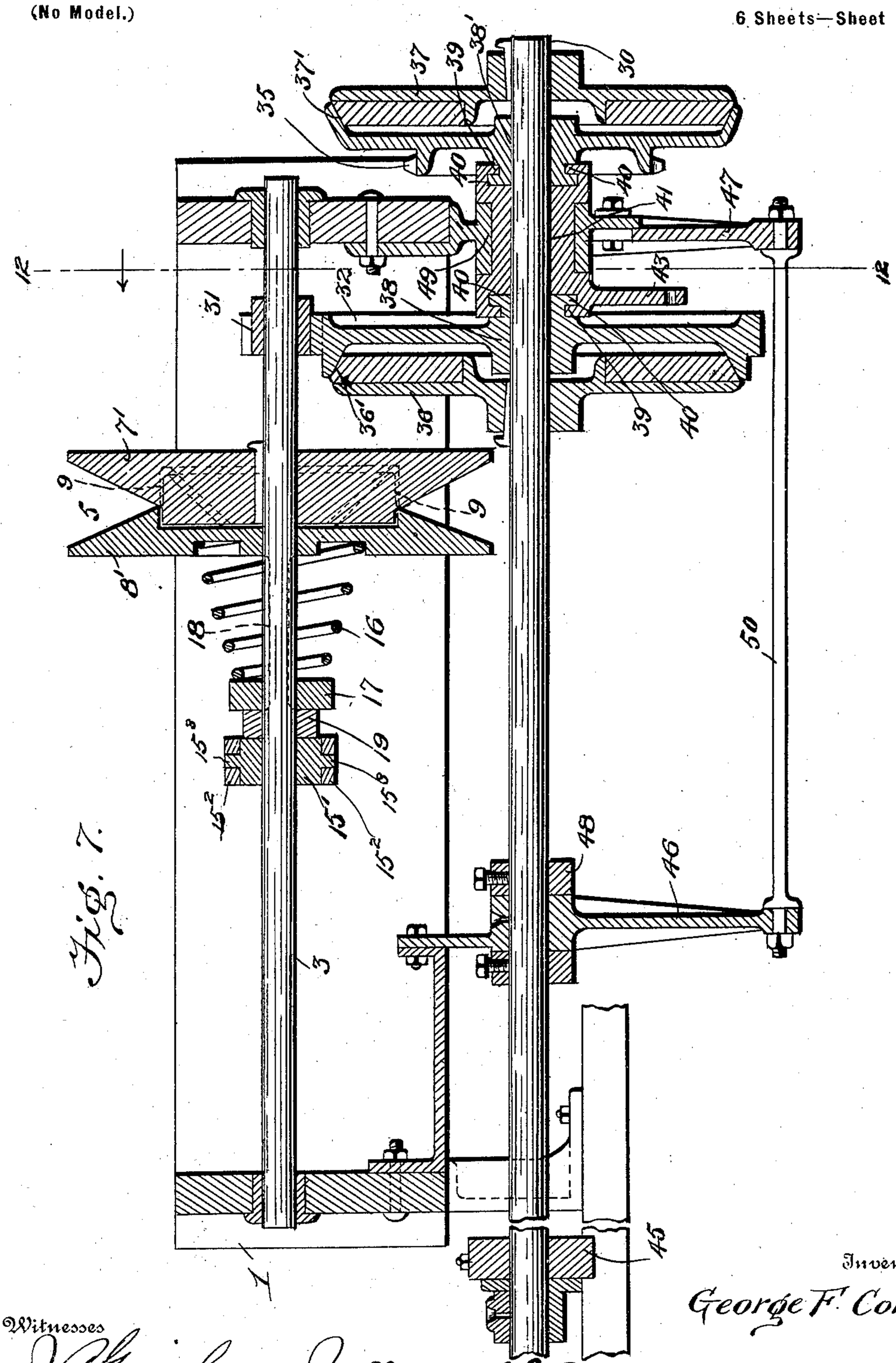

Witnesses

J. A. Gruesbeck Jr.

J. E. Wilson

Inventor

George F. Conner

By H. R. Wilson & Co.

Attorneys

THE NORRIS PETERS CO., PHOTO-LITHO., WASHINGTON, D. C.

No. 692,120. Patented Jan. 28, 1902.

G. F. CONNER.

REVERSIBLE VARIABLE SPEED GEARING.

(Application filed Mar. 11, 1901.)

(No Model.) 6 Sheets—Sheet 6.

Fig. 9.

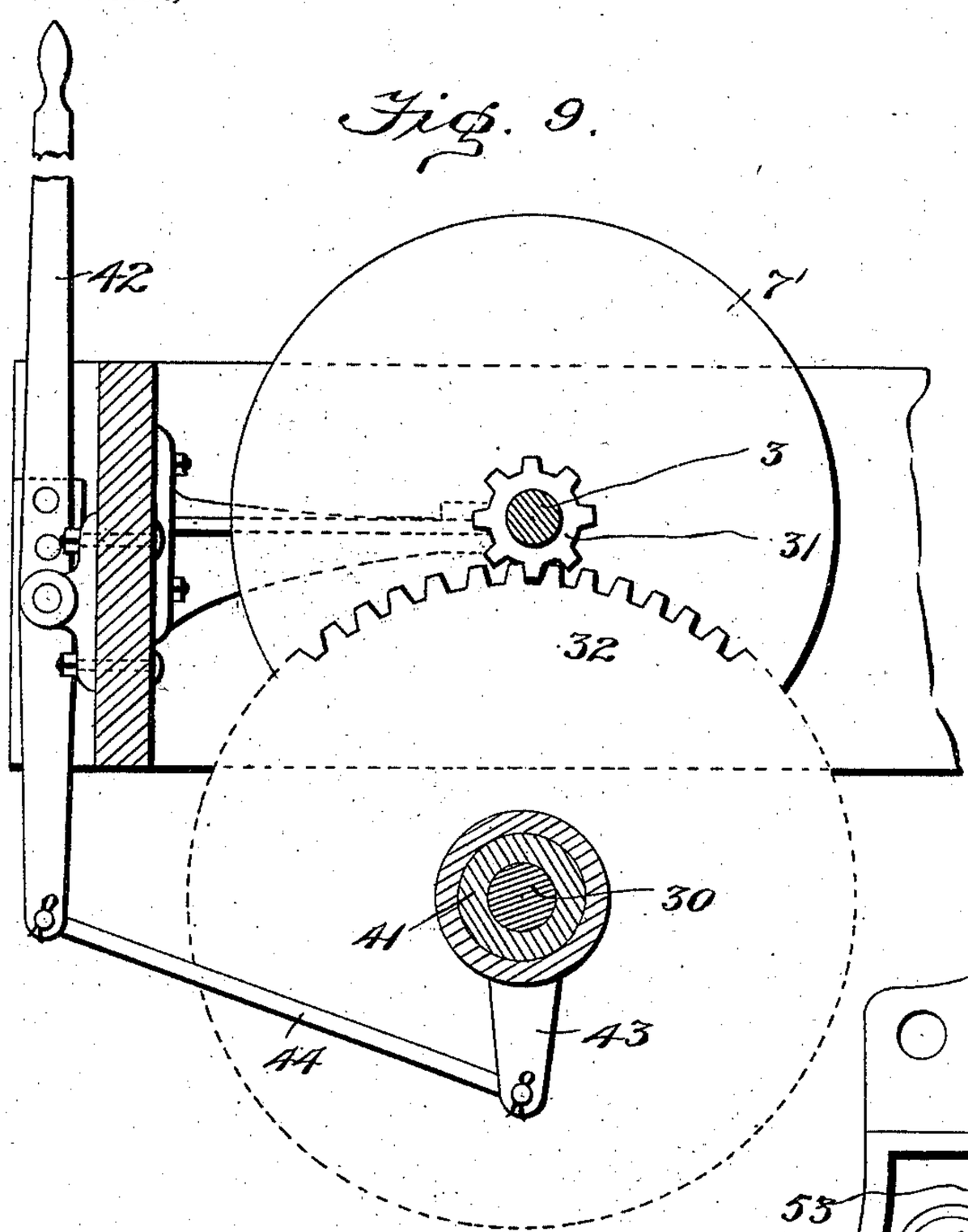

Fig. 11.

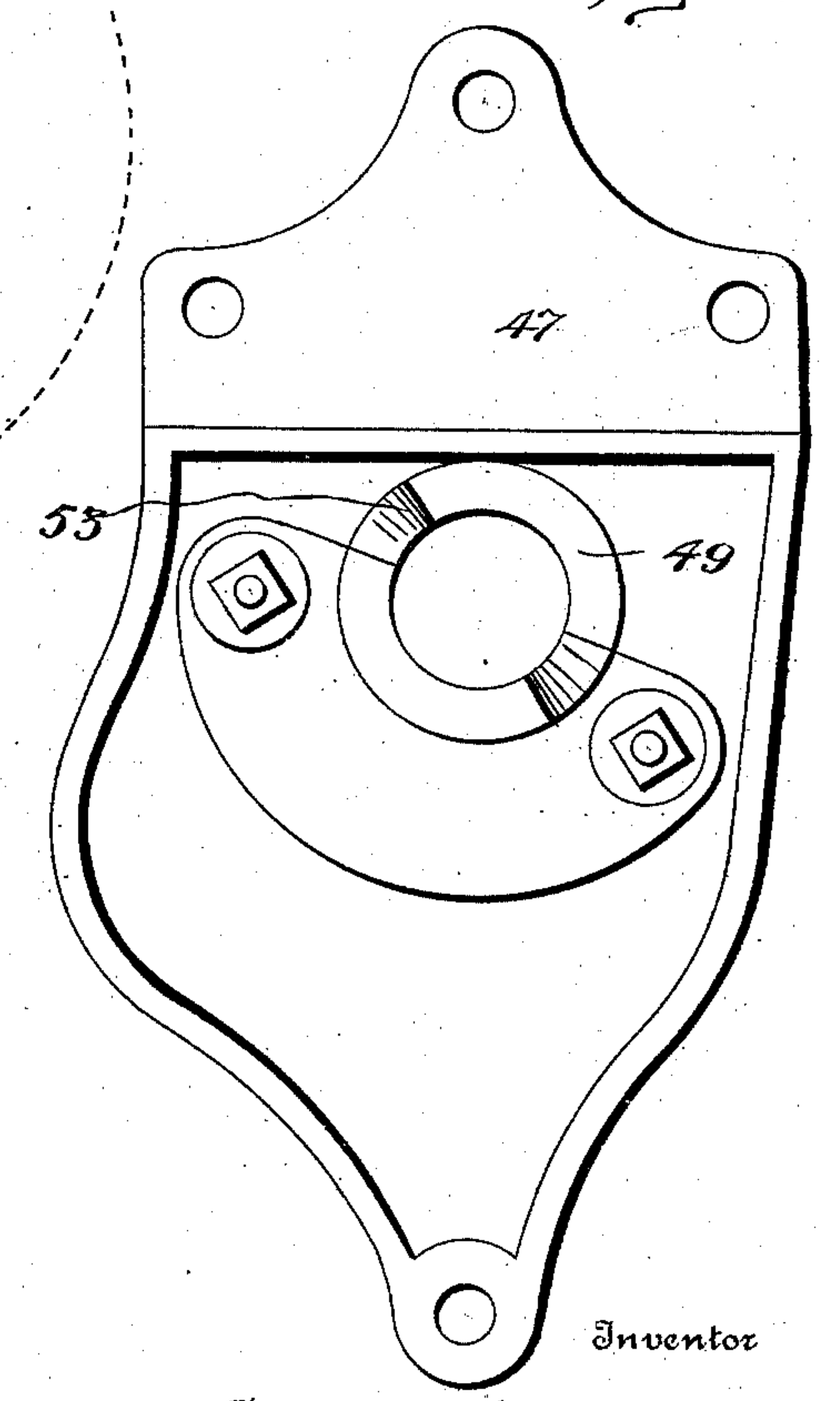

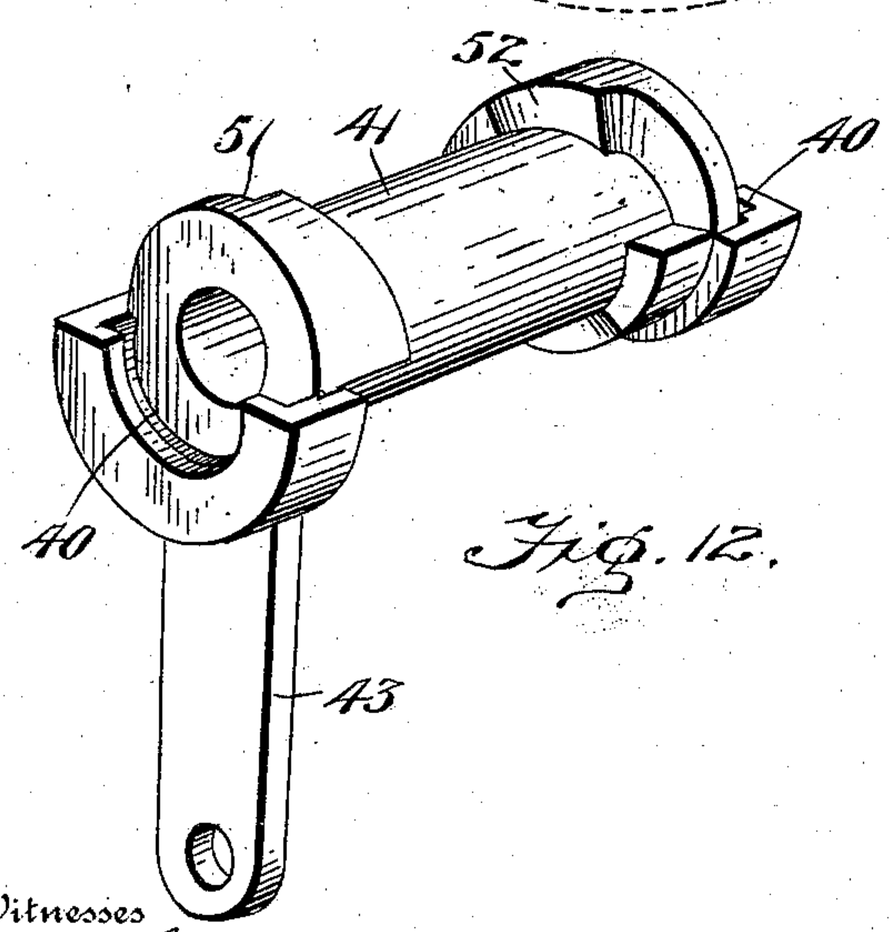

Fig. 12.

Witnesses

J. Gruesbeyer Jr.

E. Wilson

Inventor

George F. Conner

By H. Brewson & Co.

Attorneys

THE NORRIS PETERS CO., PHOTO-LITHO., WASHINGTON, D. C.

UNITED STATES PATENT OFFICE.

GEORGE F. CONNER, OF PORT HURON, MICHIGAN.

REVERSIBLE VARIABLE-SPEED GEARING.

SPECIFICATION forming part of Letters Patent No. 692,120, dated January 28, 1902.

Application filed March 11, 1901. Serial No. 50,691. (No model.)

To all whom it may concern:

Be it known that I, GEORGE F. CONNER, a citizen of the United States, residing at Port Huron, in the county of St. Clair and State of Michigan, have invented certain new and useful Improvements in Reversible Variable-Speed Gearing; and I do declare the following to be a full, clear, and exact description of the invention, such as will enable others skilled in the art to which it appertains to make and use the same.

This invention relates to improvements in variable-speed gearing of that type wherein expansible cone-pulleys are arranged upon shafts and connected by a drive-belt and the relative speeds of rotation of the shafts are controlled or regulated by simultaneously increasing the belt-running surface of the pulley upon one shaft and decreasing such surface of the pulley on the other shaft through the medium of suitable shifting mechanism.

The object of the invention is to provide variable-speed gearing of this type which is comparatively simple of construction, durable in use, and effective in operation and one in which the end thrust of the sliding sections of the cone-pulleys is partially taken up and undue friction between such pulley-sections and their controlling devices avoided, the drive-belt maintained in proper position, the bearing-surface and driving qualities of the belt increased, and a quick and easy operation of the shifting mechanism for varying the speed of the driven element insured; and a further object of the invention is to provide means whereby the direction of rotation of the driven element of the variable-speed gearing may be reversed at will.

With these and other objects in view, which will appear as the nature of the invention is better understood, the invention consists of certain novel features of construction, combination, and arrangement of parts, as will be hereinafter more fully described, and particularly pointed out in the appended claims.

In the accompanying drawings, Figure 1 is a perspective view of a reversible variable-speed gearing embodying my invention. Fig. 2 is a top plan view of the same. Fig. 3 is a perspective view on a larger scale than Fig. 1 and omitting the operating-levers of the parts of the device removed from the frame. Fig. 4 is a detail side elevation of the counter-shaft and parts thereon. Fig. 5 is a section through the sliding disk of one of the cone-pulleys, the cöoperating-spring, collars, and connecting parts. Fig. 6 is a cross-section through the counter-shaft on line 6 6 of Fig. 5 looking toward the outer face of the sliding section. Fig. 7 is a sectional view through the frame, driven gear-wheel, sprocket-wheel, and friction-disks of the reversing mechanism on the power-transmitting shaft on line 7 7 of Fig. 2. Fig. 8 is a detail perspective view looking toward the inner face of one of the pulley-sections. Fig. 8^a is a similar view of the coacting pulley-section. Fig. 8^b is a cross-section through the drive-belt, showing the edges of the belt as arranged to bear against the driving-surfaces of a cone-pulley. Fig. 9 is a detail section on line 12 12 of Fig. 7. Fig. 10 is a horizontal section through the hanger 47, showing the sleeves 41 and 49 in top plan view. Fig. 11 is a side elevation of the hanger 47 with the sleeve 41 removed therefrom, and Fig. 12 is a perspective view of the sleeve 41.

Referring now more particularly to the drawings, the numeral 1 represents a suitable frame or support in which are mounted a drive-shaft 2 and a counter-shaft or driven shaft 3. On these shafts are mounted cone driving-pulleys 4 and 5, each consisting of a pair of disks or sections having conical driving-surfaces arranged to face each other. These pulleys are connected by a driving-belt 6, the construction of which will be hereinafter described, which communicates motion from the drive-shaft 2 to the said driven or counter-shaft 3. The drive-pulley 4 on the shaft 2 has one of its disks 7 keyed or otherwise fixed thereto and its other disk 8 arranged to slide loosely thereon toward and from said fixed disk 7. The pulley 5 on the counter-shaft 3 is similarly constructed, having one of its disks 7′ keyed thereto and its other disk 8′ mounted to slide thereon toward and from said disk 7′. The said loose or movable disks 8 and 8′ of the two pulleys are, like the fixed disks 7 and 7′, arranged to come upon opposite sides of the driving-belt 6—that is to say, the loose disk 8 of the pulley 4 is arranged to bear against one side edge of the belt, while the corresponding loose disk 8′ of the pulley 5 is arranged to bear against the opposite side

edge of the belt. The meeting faces of the disks of each pulley 4 and 5 are provided one with lugs or projections 9 and the other with recesses or sockets 9[a] to receive said lugs, which hold the disks connected and adapt the loose disk to rotate with the shaft. By this construction it will be seen that by the sliding of the loose disk of each pulley on its shaft said pulley is adapted to cause the conical driving-faces of the disks to approach and recede from each other, thus effecting a change in the position of the belt contact on the cones, whereby the speed is varied in a manner more fully hereinafter described. The purpose of arranging the loose disks 8 and 8′ to lie upon opposite sides of the driving-belt 6 is to keep the belt always at right angles to the shafts and in proper line when the disks of the pulleys are opened and closed. It will be readily understood that in effecting a change in speed the disks of the pulley upon one shaft are forced apart, while the disks of the pulley upon the other shaft are drawn together, and in thus shifting the disks it will be apparent that if both loose disks were located upon the same side of the belt the latter would tend to creep away from one side of the fixed pulleys and to get out of proper alinement; but by arranging the loose disks to lie upon opposite sides of the belt but one of said loose disks moves away from the belt at a time, whereby the fixed disk of the other pulley in line with said loose disk is adapted to act as a guide to deter creeping of the belt, and thus prevent the belt from getting out of alinement.

The belt 6 comprises in its construction a link chain 10, composed of link members jointed together and provided at their side edges with flattened inclined bearing-faces 11. To said chain is secured a band 12, of leather or other suitable pliable material, said band being of somewhat greater width than the chain and having its longitudinal side edges 13 free to fold at an angle to the body of the band against the said inclined faces 11 of the chain-links to form frictional driving-surfaces. The band may be secured to the chain in any desired manner; but I prefer to employ the construction shown in the present instance, wherein the links of the chain are provided with integral studs or projections 14, which pass through openings formed in the belt and are clenched or upset against the inner side thereof to hold said belt firmly connected to the chain. The band 12 is caused to assume a U form under the pressure of the conical driving-surfaces of the pulley-disks, and the side edges 13 of said band are caused to fold at an angle against the flattened angular faces 11 of the chain to form frictional driving-surfaces, which contact with the said conical driving-faces of the pulley-disks. This construction of the belt with a chain having links formed with flattened side faces and a pliable band having free portions adapted to fold against said angular side faces is of advantage in providing reinforced frictional driving-surfaces which vary in pressure against the conical faces of the disks according to the relative positions of the latter, and thereby adapt the chain to have a much stronger driving action than if the chain or belt were used alone. The belt is not herein claimed except in combination with the other coöperating features of the variable-speed gearing herein described, as it forms the subject-matter of another application filed of even date herewith, Serial No. 50,692. The pulleys are adjusted by the action of the driving-belt on the sliding pulley-sections 8 8′ and by providing means for limiting the outward movement of said sliding sections under the thrust of said belt. In other words, the tendency of the belt to force the sliding sections 8 8′ outward is taken advantage of in effecting the adjustment of the pulleys for varying the speed, one pulley being increased, while the other is reduced by positively sliding the movable section of one pulley inward and allowing the movable section of the other pulley to be slid outward to a limited extent under the pressure of the driving-belt. The construction for effecting this result will now be described.

On the shafts 2 and 3 are arranged collars 15 15′, which are loosely mounted to slide upon said shafts, but do not turn therewith. Each movable pulley-disk 8 8′ is provided with a sliding hub or projection consisting of arms 18, projecting from the outer face thereof and connected at their outer ends to a ring or band 19, sliding loosely on the shaft and bearing against the collar. These arms 18 fit and slide through a bearing-collar 17, fixed to the shaft, whereby the said movable pulley-disk is free to slide toward and from the collar 15 or 15′, but rotates with the shaft. As heretofore stated, the belt is adapted to assume a U form to fit the conical driving-surfaces of the cone-disks of each pulley and has therefore a tendency to cause considerable end thrust—that is to say, it tends to force the cones apart and to produce undesirable friction on the sliding collars 15 and 15′. To take up a part of this end thrust and prevent undue friction on the collars 15 and 15′, a coil-spring 16 is arranged to bear against the outer surface of each loose pulley-disk 8 and 8′ and extends between the same and the bearing-collar 17. The collars 15 and 15′ are adapted to bear against the rings or bands 19, but are free from connection therewith, and act in the nature of stops to limit the outward movement of the movable pulley-disks 8 and 8′ and to take up a portion of the end thrust of the driving-belt thereon. The springs 16 being arranged between the movable pulley-disks and bearing-collars 17 normally act to resist the outward movement of said loose disks under the end thrust of the belt, and thereby maintain said disks in working position and at the same time relieve the shifting collars 15 and 15′ against the greater portion of the

pressure of the bands 19 and prevent undue friction between these parts. Each bearing-collar 17 consists of two sections 17′ 17^2, removably clamped to its shaft by bolts 17^3 and provided with communicating recesses 17^4, forming spaces to receive the arms 18, which slide through them. It is considered essential to employ the springs 16 on the drive-shaft; but they may be omitted, if desired, from the driven shaft, although their use on the latter shaft gives better result in the way of reducing friction.

The collars 15 and 15′ are simultaneously shifted one toward and the other from the co-operating loose disks 8 and 8′ to vary the speed of the gearing through the medium of mechanism which will now be described.

In the frame 1 is mounted at right angles to the shafts 2 and 3 a rock-shaft 20, which is provided at opposite ends with crank-arms 21 and 21′, to which are pivotally attached the connecting-rods 22 and 22′, which are also pivotally attached, respectively, by means of yokes 15^2 engaging pins 15^3, to the sliding collars 15 and 15′ to move said collars toward and from the two loose disks 8 and 8′. The crank-arms 21 21′ are so arranged upon the rock-shaft 20 that when said rock-shaft is turned in one direction a reverse movement of the two loose disks 8 and 8′ will take place, the disk 8, for instance, being moved away from its complemental disk 7, while the disk 8′ is moved toward its complemental disk 7′, the turning of the rock-shaft in the opposite direction causing a reverse action of these parts. This action is attained by the positive sliding of one of the loose disks toward its complemental fixed disk under the action of the shifting collar and the sliding of the other loose disk away from its complemental fixed disk under the endwise thrust of the belt as the coöperating shifting collar is shifted in a direction away from said loose disk. Hence it will be seen that when the rock-shaft 20 is moved to the right in Fig. 1 the shifting collar 15 will be moved away from the pulley 4, allowing the loose pulley-disk 8 to be slid outward under the endwise thrust of the belt 6 against the tension of the spring 16, thereby reducing the pulley 4, while the pulley-disk 8′, on the other hand, will be moved toward the pulley-disk 7′ under the direct pressure of the collar 15′, thus increasing the pulley 5. When, on the contrary, the rock-shaft 20 is turned to the left in Fig. 1, the disk 8 will be pushed toward the disk 7 by the collar 15, thus increasing the pulley 4, while the disk 8′, being left free to slide by the outward movement of the collar 15′, will be forced away from the disk 7′ by the pressure of the belt 6, thus increasing the pulley 5. By this construction it will be seen that the relative speeds of rotation of the shafts 2 and 3 may be varied and controlled or regulated by simultaneously increasing the belt-running surface of the pulley on one shaft and decreasing such surface of the pulley on the other shaft, thereby adapting either shaft to run at will faster than the other. The rock-shaft 20 is operated through the instrumentality of a variable-speed lever 23, to which is connected, by means of a rod 24, one arm of a bell-crank lever 25, the other arm of which is connected to a crank-arm 26 on the rock-shaft by a connecting-rod 27. The variable-speed lever 23 is provided with a pawl 28 to engage a rack 29 on the frame 1 to hold it fixed in adjusted position, and by moving this lever inwardly toward the frame the rock-shaft will be operated to reduce the pulley 4 and increase the pulley 5, while by throwing said lever in the reverse direction the rock-shaft will be operated to increase the pulley 4 and reduce the pulley 5, whereby the radius of the belt contact on the faces of the cones is shifted from one cone to the other and the relative speeds of the shafts 2 and 3 accordingly varied.

It will be seen from the foregoing description that each collar 15 15′ when moved away from its pulley allows the loose pulley-disk to be slid outward by the endwise or lateral thrust of the belt and when moved toward the pulley assists the spring 16 in moving the loose pulley-disk toward its fixed complemental disk; also, that as the spring 16 resists the outward movement of the loose pulley-disk under the thrust of the belt said spring takes up a part of the thrust, thereby preventing the band 19 from bearing too heavily on the collars 15 and 15′ and producing undue friction.

Power is transmitted from the counter-shaft 3 to a power-transmitting shaft 30 through a pinion 31, fixed on said counter-shaft and meshing with a gear-wheel 32, journaled to rotate loosely on the said power-transmitting shaft.

Reversing mechanism is provided whereby the driven parts of the variable-speed gearing may be run in either direction. This comprises a sprocket-pinion 33, fixed on the drive-shaft 2 and having passed therearound a chain 34, which also passes around a sprocket-wheel 35, journaled to rotate loosely and slide on the power-transmitting shaft 30. On said shaft 30 are fixed friction-disks 36 and 37, which are adapted to be engaged by frictional bearing-faces 36′ and 37′ on the said gear-wheel 32 and sprocket-wheel 35. The gear-wheel 32 and sprocket-wheel 35 are adapted to be alternately clutched to rotate with the shaft 30 by sliding them toward and from the said friction-disks 36 and 37, and to effect this the said gear-wheel and sprocket-wheel are provided with corresponding hubs or projections 38 and 38′, which are formed with annular grooves 39 to receive segmental tongues or flanges 40, formed upon the opposite ends of a sleeve 41, loosely mounted to slide and oscillate on the shaft 30, said tongues or flanges being mounted to move loosely in said grooves 39. The shaft 30 is supported by and journaled in the bearing 45 and hang-

ers 46 and 47. The hanger 46 has a bearing-sleeve 48 to receive said shaft, and the hanger 47 a hub or sleeve 49 to receive the oscillatory sleeve 41. The lower ends of the hangers are connected and braced by a rod 50. The sleeve 41 is oscillated by means of a crank-arm 43, connected with a reverse-lever 42, by which said sleeve may be turned upon the shaft 30 and within the hub 49 in either direction. As the sleeve 41 is oscillated in one direction or the other it is also caused to slide longitudinally in one direction or the other on the shaft 30 to move the gear-wheel 32 into contact with its friction-disk 36 and the sprocket-wheel 35 away from its friction-disk 37, or vice versa, and this action is attained by the following construction: The sleeve 41 is provided at each end with two similarly-projecting spiral cam-surfaces 51 and 52, which ride upon similar cam-surfaces 53 and 54, formed upon the ends of the bearing hub or sleeve 48. The cam-surfaces upon the opposite ends of the two sleeves also project similarly, so that when said sleeve 41 is turned in one direction it will be forced to slide in one direction, and when turned in the other direction will be caused to slide in the opposite direction. It will thus be seen that upon throwing the lever 42 in one direction the sleeve 41 will be turned in that direction, and through its tongues or flanges 40 engaging the grooves 39 and its cam-surfaces 51 and 52 engaging the cam-surfaces 53 and 54 on the hub or sleeve 48 will slide the gear-wheel 32 and sprocket-wheel 35 in the same direction, causing one of said wheels—for instance, the gear-wheel 32—to come into frictional engagement with the friction-disk 36, while the sprocket-wheel 35 is drawn away from the other friction-disk 37. Upon throwing the reversing-lever in the opposite direction the reverse action takes place, and by operating this lever the sleeve 41 may be moved to cause the gear-wheel 32 to engage the friction-disk 36 or the sprocket-wheel 35 to engage the friction-disk 37, as desired. When it is desired to have the power-transmitting shaft 30 turn in one direction, the reverse-lever 42 is operated to turn the sleeve 41 to bring the frictional bearing-face 36′ of the gear-wheel 32 into engagement with the friction-disk 36, whereupon said gear-wheel 32 will be clutched or rigidly connected to turn with the shaft 30, and power being communicated thereto from the counter-shaft 3 by the pinion 31 will drive said shaft 30 in one direction. When the parts are being operated through this arrangement of the gearing, the sprocket-chain 34 turns the sprocket-wheel 35 loosely around the shaft 30, whereby the latter is left free to be operated by the gear-wheel 32. When, however, it is desired to cause the driving parts of the speed-gearing to turn in the reverse direction, the reversing-lever 42 may be shifted to turn the sleeve 41 in the reverse direction to that heretofore described, causing the gear-wheel 32 to move away from the friction-disk 36 and the sprocket-wheel 35 to engage the friction-disk 37, thus fixing said sprocket-wheel to the shaft 30, whereupon motion will be communicated to the shaft 30 from the drive-shaft 1 through the medium of the pinion 33 and chain 34, whereby a reverse direction of movement of the drive members of the speed-gearing will be set up in a manner readily understood.

From the foregoing description, taken in connection with the accompanying drawings, the construction and mode of operation of the invention will be readily understood without a further extended description, and it will be seen that an effective form of variable speed-gearing and reversing mechanism therefor is provided.

Various modifications in the construction and arrangement of parts may be made within the scope of the invention without departing from the spirit or sacrificing any of the advantages thereof.

Having thus fully described my invention, what I claim as new, and desire to secure by Letters Patent, is—

1. Variable-speed mechanism comprising two shafts, an expansible pulley mounted on each shaft, each pulley consisting of a fixed member and a movable member, a belt connecting said pulleys, a loose shifting collar on each shaft, a fixed bearing-collar on each shaft between the loose member and shifting collar, a hub or projection extending from each loose member and sliding in said fixed collar, and adapted to bear against said shifting collar, and a coil-spring surrounding said hub or projection between each loose member and fixed bearing-collar, and serving to normally press said loose member toward its complemental fixed member and to take up a part of the endwise thrust of the belt, thereby preventing undue friction between the said hub or projection and shifting collar, substantially as set forth.

2. Variable-speed mechanism comprising two shafts, an expansible pulley mounted on each shaft, each pulley consisting of a fixed member and a movable member, a belt connecting said pulleys, a loose shifting collar on each shaft, a fixed bearing-collar on each shaft between the loose member and shifting collar, a hub or projection extending from each loose member and sliding in said fixed collar and adapted to bear against said shifting collar, a coil-spring surrounding said hub or projection between each loose member and fixed bearing-collar and serving to normally press said loose member toward its complemental fixed member and to take up a part of the endwise thrust of the belt, thereby preventing undue friction between the said hub or projection and shifting collar, and means for simultaneously operating the shifting collars to contract one pulley and expand the other pulley, substantially as specified.

3. In a variable-speed device, a drive-shaft, a driven shaft, a power-transmitting shaft,

variable-speed gearing between the drive-shaft and the driven shaft for changing the relative speeds of said shafts, said gearing comprising expansible pulleys on said drive and driven shafts, a belt connecting said pulleys, and means for simultaneously contracting one pulley and expanding the other pulley; in combination with gearing between the driven shaft and power-transmitting shaft and between the drive-shaft and power-transmitting shaft, and means for throwing either of said two sets of gearing connecting with the power-transmitting shaft into action at will for operating the drive parts of the gearing in either direction as desired, substantially in the manner set forth.

4. In a variable-speed device, the combination of two shafts, pulleys mounted thereon, each comprising a fixed and a movable part, a belt connecting the pulleys, sliding sleeves for operating the movable parts of the pulleys, a rock-shaft, connections between the rock-shaft and sleeves to operate said sleeves to cause one to slide the movable part of one pulley toward the fixed part of said pulley, and the other sleeve to slide the movable part of the other pulley away from the fixed part of said latter pulley, a bell-crank lever, a variable-speed lever connected with one arm of said bell-crank lever, and a connection between the other arm of the bell-crank lever and the rock-shaft, substantially as set forth.

5. In a variable-speed device, the combination of a drive-shaft, a counter-shaft and a power-transmitting shaft, cone-pulleys on the drive and counter shafts, a belt connecting said pulleys, means for simultaneously and alternately contracting and expanding the pulleys to vary the relative speeds of said drive and counter shafts, gearing between the counter-shaft and power-transmitting shaft including a member loosely mounted on the latter shaft, gearing between the drive-shaft and power-transmitting shaft and also including a member loosely mounted on the power-transmitting shaft, clutches alternately acting on the said two loose members on the power-transmitting shaft for reversing the action of the gearing, and means for operating said clutches, substantially as set forth.

6. In a variable-speed device, the combination of a drive-shaft, a counter-shaft and a power-transmitting shaft, cone-pulleys on the drive and counter shafts, a belt connecting said pulleys, means for simultaneously and alternately contracting and expanding the pulleys to vary the relative speeds of said drive and counter shafts, gearing between the counter-shaft and power-transmitting shaft including a member loosely mounted on the latter shaft, gearing between the drive-shaft and power-transmitting shaft and also including a member loosely mounted on the power-transmitting shaft, clutches alternately acting on the said two loose members on the power-transmitting shaft for reversing the action of the gearing, and cams for operating said clutches, substantially as set forth.

7. A variable-speed device comprising two shafts, an expansible pulley on each shaft, each pulley comprising a fixed member and a movable member, a belt connecting said pulleys, springs acting on the movable pulley members to resist the endwise thrust of the belt thereon, means for adjusting and positively limiting the outward movement of the movable pulley members against the pressure of the springs, and for assisting the springs to force said movable pulley members toward the fixed pulley members, and operating means acting on said adjusting and limiting means to simultaneously adjust one movable pulley member toward its complemental fixed pulley in connection with the coöperating spring and releasing the other movable pulley member to adapt it to move outward under the thrust of the belt and against the tension of its spring, substantially as described.

8. Variable-speed mechanism comprising a drive-shaft, a driven shaft, an expansible pulley on each shaft, the pulley on the drive-shaft consisting of a fixed member and a movable member, means for simultaneously expanding one pulley and contracting the other pulley, said means including a shifting collar on the drive-shaft, a fixed bearing-collar on the drive-shaft between the loose pulley member and shifting collar, a hub or projection extending from said loose pulley member and sliding in said fixed collar and adapted to bear against said shifting collar, and a coil-spring surrounding said hub or projection between the loose pulley member and the fixed bearing-collar, and serving to normally press said loose pulley member toward the complemental fixed pulley member and to take up a part of the endwise thrust of the belt, thereby preventing undue friction between the hub or projection and shifting collar, substantially as specif

In testimony whereof I
my hand in presence of tv
nesses.

GEOR

Witnesses:
H. B. HOYT,
G. R. HAIGH.