No. 682,877. Patented Sept. 17, 1901.

A. MILLS.

SEAMLESS WOVEN POCKET.

(Application filed July 13, 1901.)

(No Model.) 2 Sheets—Sheet 1.

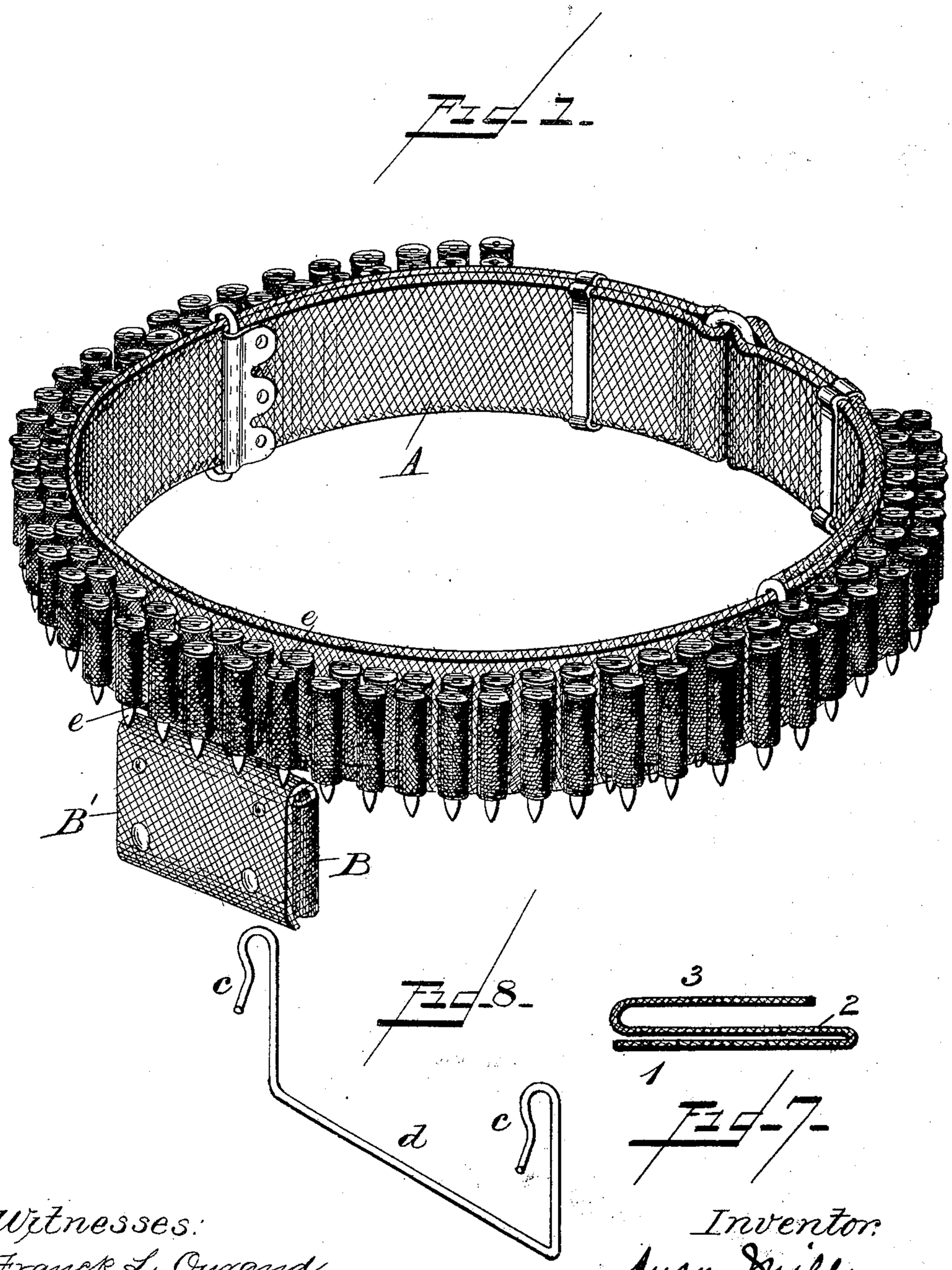

Witnesses:
Franck L. Durand
Everett A. Dick

Inventor:
Auson Mills
by Marcellus Bailey
his Attorney.

THE NORRIS PETERS CO., PHOTO-LITHO., WASHINGTON, D. C.

No. 682,877. Patented Sept. 17, 1901.

A. MILLS.

SEAMLESS WOVEN POCKET.

(Application filed July 13, 1901.)

(No Model.) 2 Sheets—Sheet 2.

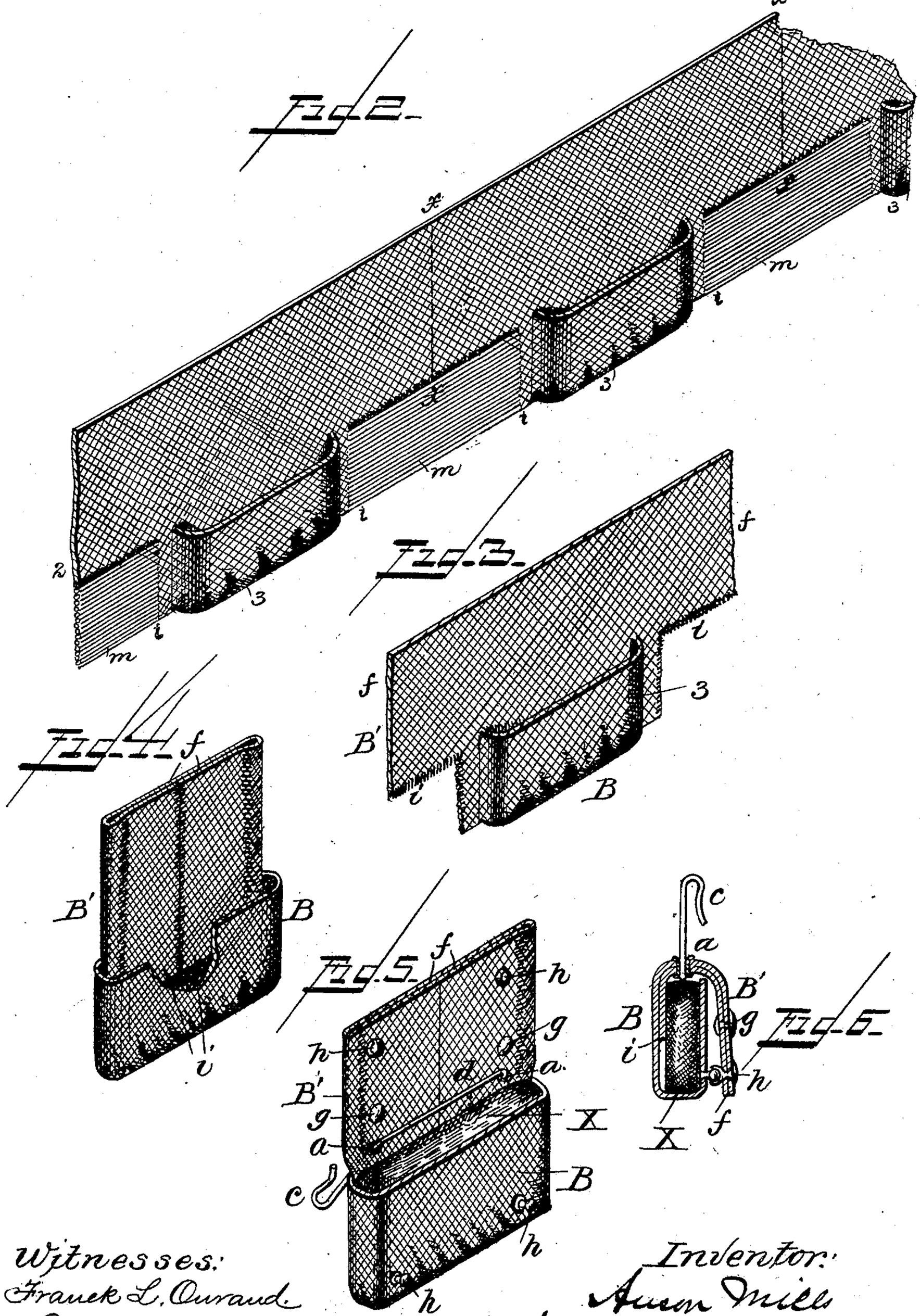

Witnesses:
Franck L. Durand.
Everett A. Wells

Inventor:
Aaron Mills
by Marcellus Dailey
his Attorney.

THE NORRIS PETERS CO., PHOTO-LITHO., WASHINGTON, D. C.

UNITED STATES PATENT OFFICE.

ANSON MILLS, OF WASHINGTON, DISTRICT OF COLUMBIA.

SEAMLESS WOVEN POCKET.

SPECIFICATION forming part of Letters Patent No. 682,877, dated September 17, 1901.

Application filed July 13, 1901. Serial No. 68,183. (No model.)

To all whom it may concern:

Be it known that I, ANSON MILLS, of the United States Army, retired, residing at Washington, in the District of Columbia, have invented a new and useful Seamless Woven Pocket, of which the following is a specification.

My invention consists of a seamless woven pocket adapted as a cartridge-belt attachment and designed, primarily, to contain a "first-aid" package for the wounded, although of course it may be used to hold other articles also. The pocket is woven in one with a flap which serves as a cover, and it is produced in the shape of a blank which is afterward folded and put into proper form. These blanks are woven continuously as a strip of indefinite length, which is afterward cut up into the individual pocket-blanks.

In the accompanying drawings, Figure 1 is a view of the cartridge-belt provided with my attachment. Fig. 2 is a view of the woven strip as it appears when spread out and before being divided up into blanks. Fig. 3 is a view of one of the blanks separated from the strip. Fig. 4 is a view of the same after the pocket has been turned inside out in order to bring the frayed edges *i* inside the pocket. Fig. 5 is a view of the completed pocket, together with the first-aid package X contained therein. Fig. 6 is a cross-section of the same. Fig. 7 is a diagrammatic cross-section of the strip through one of the pockets, designed to illustrate the manner in which the weaving is carried on. Fig. 8 is an enlarged perspective view of the device by which the pocket is detachably connected to the belt.

A is a cartridge-belt, of any desired make, provided with cartridge-receiving thimbles woven in one with the body of the belt.

B is the seamless woven pocket provided with a covering-flap B′ integral therewith. At or near the junction of the cover with the pocket the fabric is eyeleted, as at *a*, and through these eyelet-holes protrude the hook ends *c* of a longitudinal stiff bar or round rod *d*, which hooks *c* are adapted to engage eyelet-holes *e* in the body of the belt A, the pocket being thus detachably connected to the belt. The pocket is of a size to receive the first-aid package X. This package is usually carried by the soldier in his blouse or trousers pocket or haversack, where it soon becomes soiled. By providing a pocket such as shown the first-aid package is protected thoroughly from injury. The pocket in which it is contained is attached to a part of the belt where it will be quite out of the way and is detachably connected therewith, so that it can be taken off and stored away whenever desired. The pocket is made from a blank of the form shown in Fig. 3. The covering-flap is woven as an extension of the inner ply—that is to say, that ply of the fabric which forms the back of the pocket. For this purpose the inner ply might be woven flat in one extended sheet of sufficient width to furnish the covering-flap. This, however, would necessitate a loom wider than that employed to weave belts and would be expensive.

In order to weave the pocket in a loom such as used to weave belts, it is woven in the manner described, for example, in the Mills and Orndorff patent, No. 654,475, of July 24, 1900, as a three-ply fabric, which in the loom has a shape in cross-section approximating that of a flattened **S**, as shown in Fig. 7. The three plies are numbered 1 2 3. Ply 1 is the covering-flap ply. Ply 2 is the inner ply, which forms the back of the pocket. Ply 3 is the outer ply, which forms the front of the pocket. Plies 2 and 3 are woven integral or in one at the edges *i*, Figs. 2 and 3, forming narrow solid strips, which close the sides of the pocket. Where the pockets are formed the outer ply 3 is woven of greater length than the inner ply 2, so as to form that portion of the outer ply with a fullness of sufficient capacity to allow the first-aid package to be inserted between it and the inner ply 2 in the manner illustrated in Orndorff's patent, No. 666,687, of January 29, 1901. Between the edges *i* the warps are "floated" or thrown entirely out of the weave, so that in this portion of the fabric they appear merely as longitudinal threads, as seen at *m*, Fig. 2. Blanks can thus be woven in a strip of indefinite length. The one blank is severed from the other along the dotted lines *x x*, Fig. 2, and the floating warps are cut off close up to the edges *i*. The blank is shown in this condition in Fig. 3. Next the pocket is turned inside out, as shown in Fig. 4, so as to bring the edges *i* inside the

pocket. The sides *f* of the flap portion are folded inwardly upon the body of the flap and toward each other. The lower ends of these folds *f* being tucked down fit the pocket, as seen in Fig. 4. The folds are then secured to the body of the covering-flap by rivets *g* or other suitable means, and, if desired, the meeting edges of the folds can be stitched together. Suitable fasteners for holding the covering-flap closed are provided, consisting in this instance of a snap-fastener *h*, like a glove-fastener, having one part secured to the flap and the other part to the pocket. The finished pocket, with the covering-flap lifted, is shown in Fig. 5.

Having described my invention and the manner in which the same is or may be carried into effect, what I claim herein as new and of my own invention is—

1. The seamless woven "first-aid-package" pocket, herein described having the edges *c* inside the pocket, and a covering-flap with lateral inturned folds *f* secured to the body of the flap, substantially as set forth.

2. The seamless "first-aid-package" pocket provided with a device for detachably connecting it with a cartridge-belt consisting of a bar *d* placed on and extending lengthwise of the inner face of the pocket-flap, and provided with hook ends *c* which protrude through eyelets in the fabric, and are adapted to engage the cartridge-belt, substantially as hereinbefore set forth.

3. The woven seamless "first-aid-package" pocket consisting of the woven body of the pocket, the solid side edges *i*, and the covering-flap B′ forming a prolongation of the inner ply of the pocket and provided with laterally-extended wings *f* as hereinbefore described and illustrated.

4. The strip composed of a series of connected woven blanks, and consisting of the pocket portions B, the flap portions B′ with lateral extensions *f*, which are in a continuous weave, and the solid edges *c* with floating warps *m* between the adjoining edges *c* of contiguous blanks, as herein described and illustrated.

In testimony whereof I have hereunto set my hand this 28th day of June, 1901.

ANSON MILLS.

Witnesses:
EWELL A. DICK,
EDWIN KING LUNDY.