No. 671,412. Patented Apr. 2, 1901.

R. M. & C. E. CHAMBERS.

MACHINE FOR WIRING CORKS OF BOTTLES.

(Application filed Dec. 8, 1900.)

(No Model.) 10 Sheets—Sheet 1.

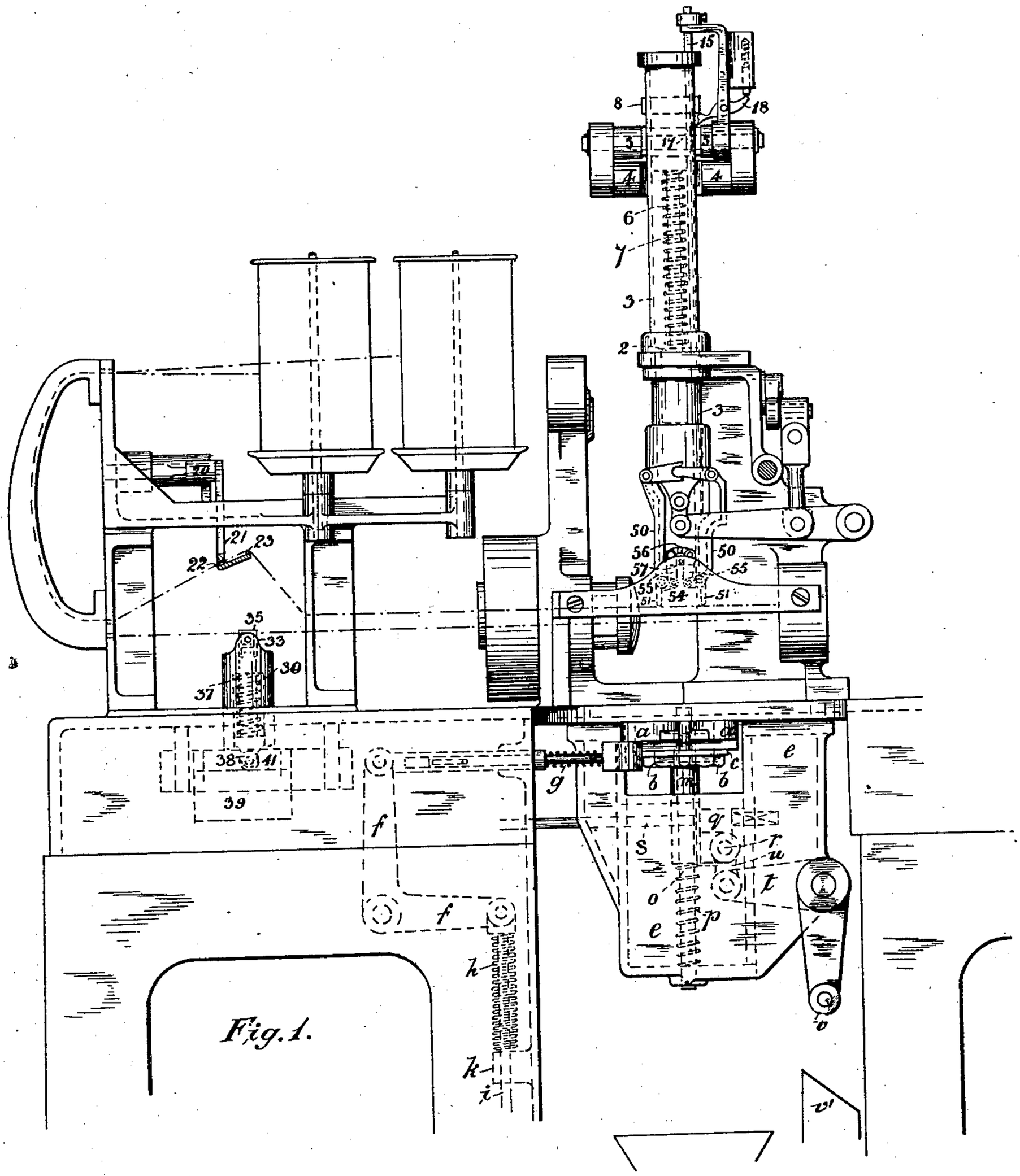

Fig. 1.

Attest
Miller Donaldson
C. Middleton

Inventors
Robert Martin Chambers
Charles Edward Chambers
by Ellis Spear
Atty.

THE NORRIS PETERS CO., PHOTO-LITHO., WASHINGTON, D. C.

No. 671,412. Patented Apr. 2, 1901.

R. M. & C. E. CHAMBERS.

MACHINE FOR WIRING CORKS OF BOTTLES.

(Application filed Dec. 8, 1900.)

(No Model.) 10 Sheets—Sheet 2.

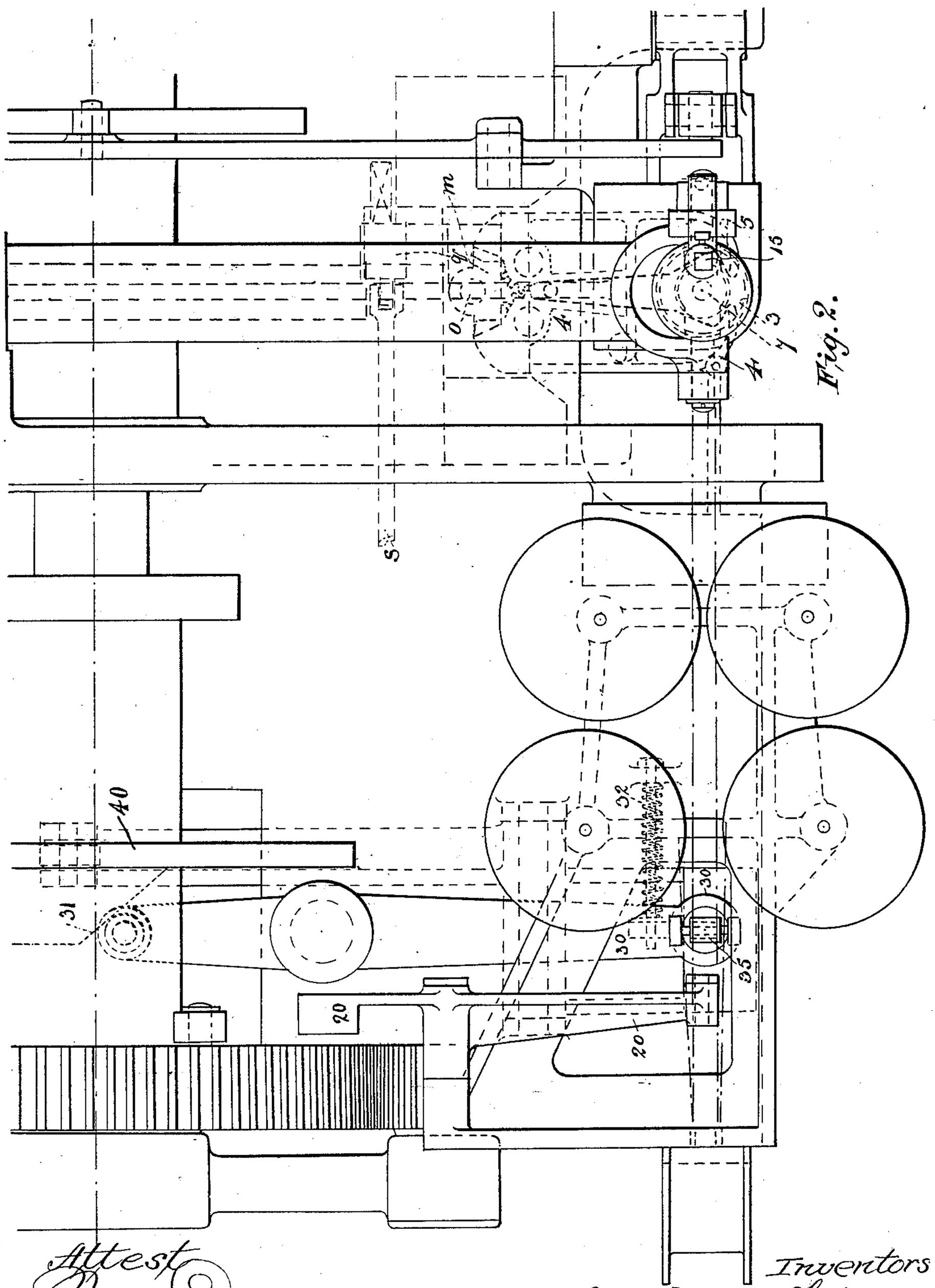

Fig. 2.

Attest
Walter Dandelsay
O. Madison

Inventors
Robert Martin Chambers
Charles Edward Chambers
by Ellis Spear Atty.

THE NORRIS PETERS CO., PHOTO-LITHO., WASHINGTON, D. C.

No. 671,412. Patented Apr. 2, 1901.

R. M. & C. E. CHAMBERS.

MACHINE FOR WIRING CORKS OF BOTTLES.

(Application filed Dec. 8, 1900.)

(No Model.) 10 Sheets—Sheet 3.

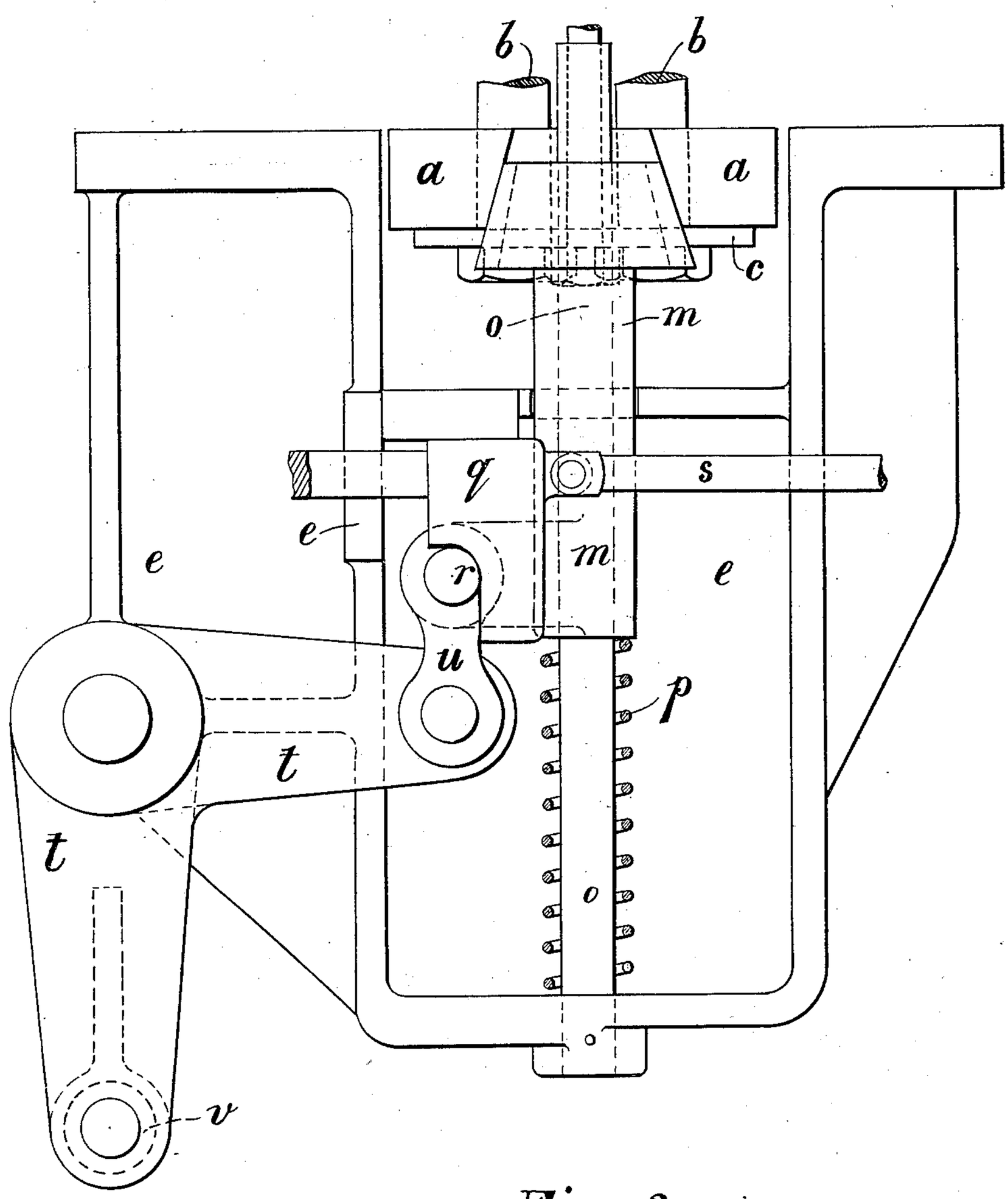

Fig. 3.

Attest
Walter Donaldson
J. S. Middleton

Inventors
Robert Martin Chambers
Charles Edward Chambers
by Ellis Spear Atty.

THE NORRIS PETERS CO., PHOTO-LITHO., WASHINGTON, D. C.

No. 671,412. Patented Apr. 2, 1901.

R. M. & C. E. CHAMBERS.

MACHINE FOR WIRING CORKS OF BOTTLES.

(Application filed Dec. 8, 1900.)

(No Model.) 10 Sheets—Sheet 4.

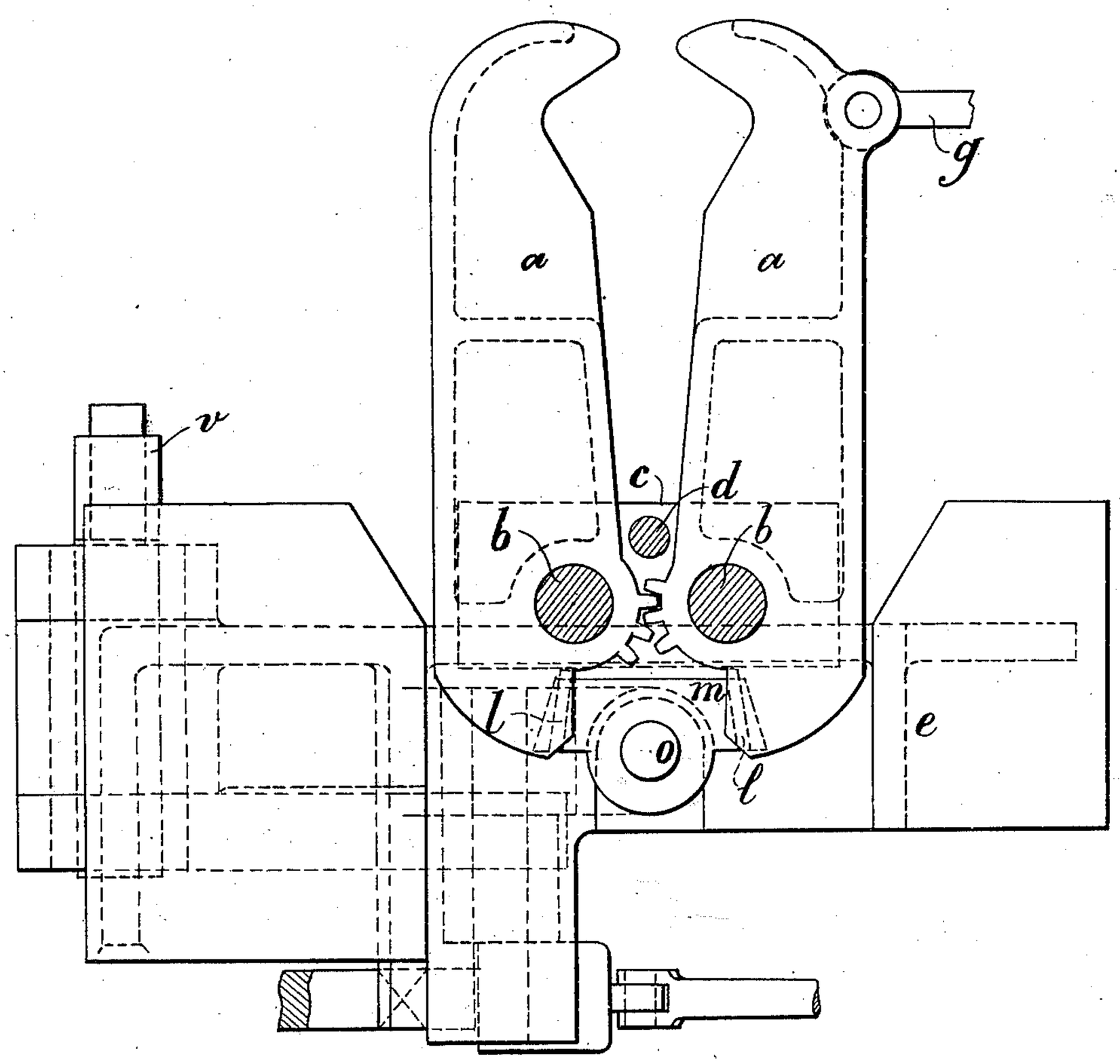

Fig. 4.

Attest
Walter Donaldson
J. Middleton

Inventors
Robert Martin Chambers
Charles Edward Chambers
by Ellis Spear Atty.

THE NORRIS PETERS CO., PHOTO-LITHO., WASHINGTON, D. C.

No. 671,412. Patented Apr. 2, 1901.

R. M. & C. E. CHAMBERS.

MACHINE FOR WIRING CORKS OF BOTTLES.

(Application filed Dec. 8, 1900.)

(No Model.) 10 Sheets—Sheet 5.

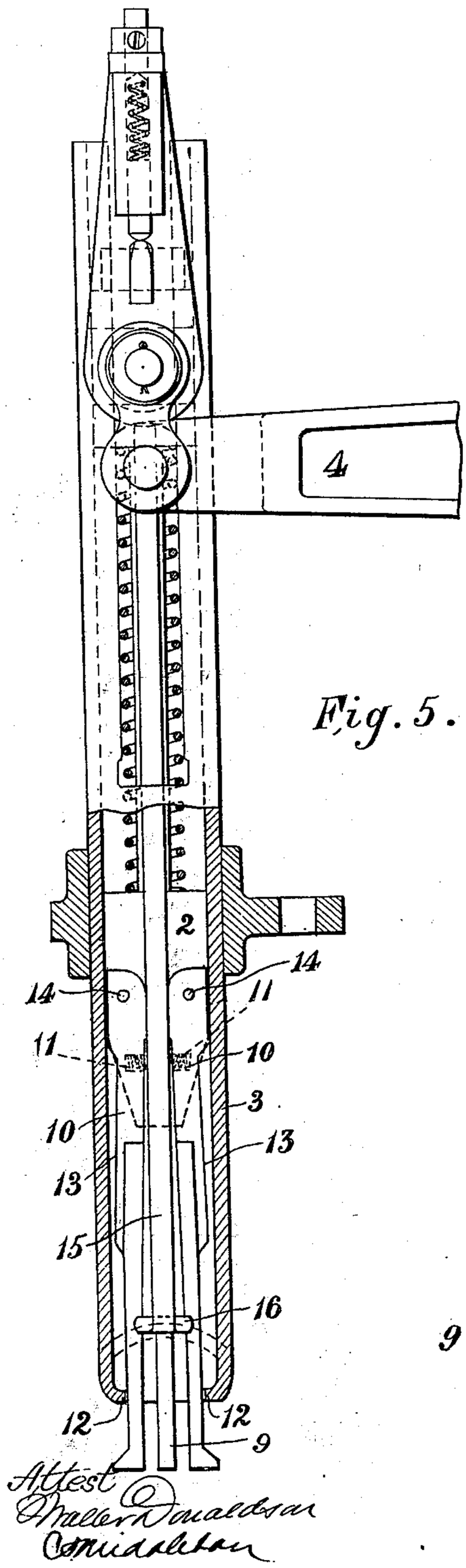

Fig. 5.

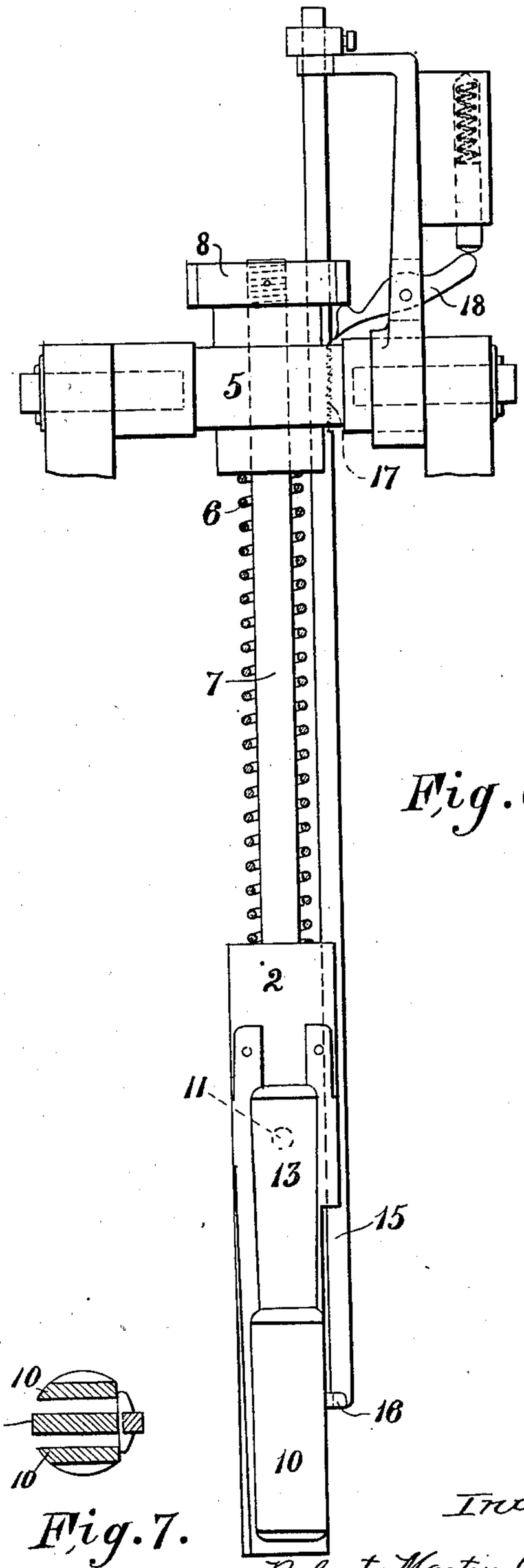

Fig. 6.

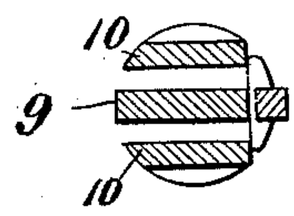

Fig. 7.

Attest
Walter Donaldson
C. M. Donaldson

Inventors
Robert Martin Chambers
Charles Edward Chambers
by Ellis Spear Attys

THE NORRIS PETERS CO., PHOTO-LITHO., WASHINGTON, D. C.

No. 671,412. Patented Apr. 2, 1901.

R. M. & C. E. CHAMBERS.

MACHINE FOR WIRING CORKS OF BOTTLES.

(Application filed Dec. 8, 1900.)

(No Model.) 10 Sheets—Sheet 6.

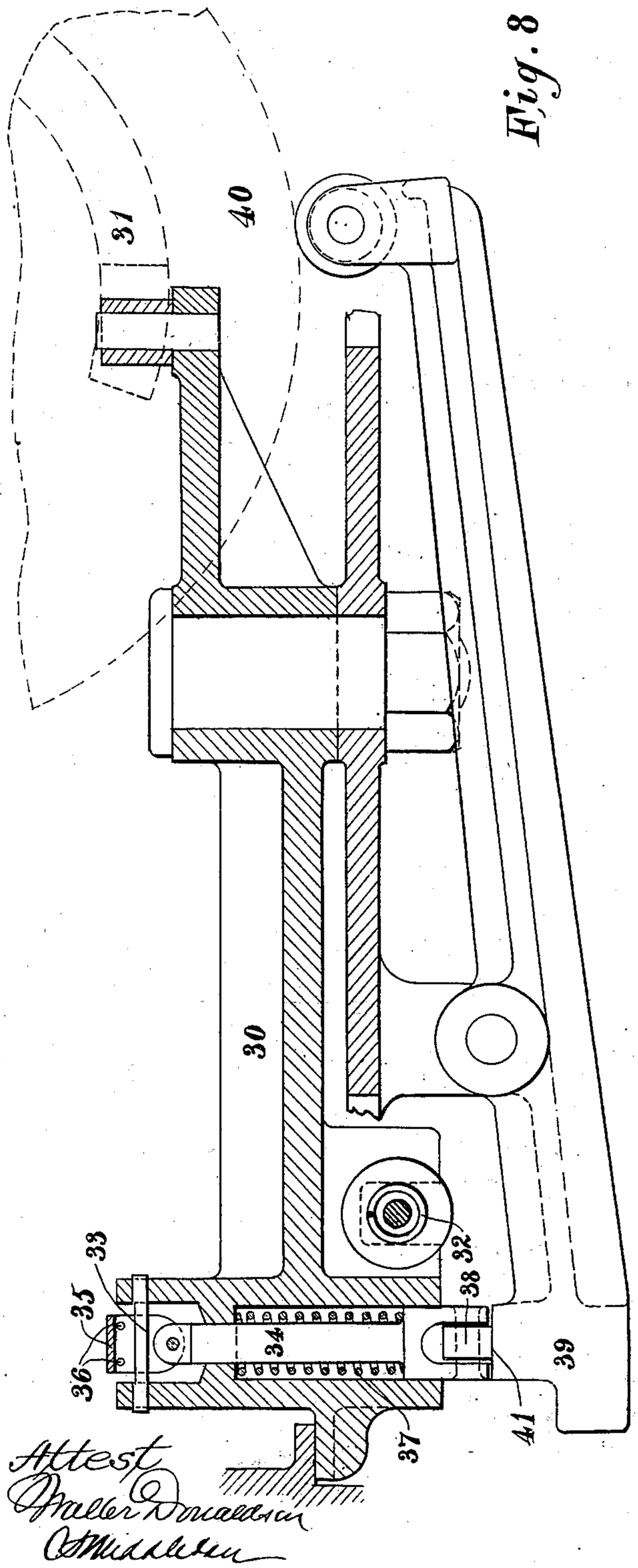

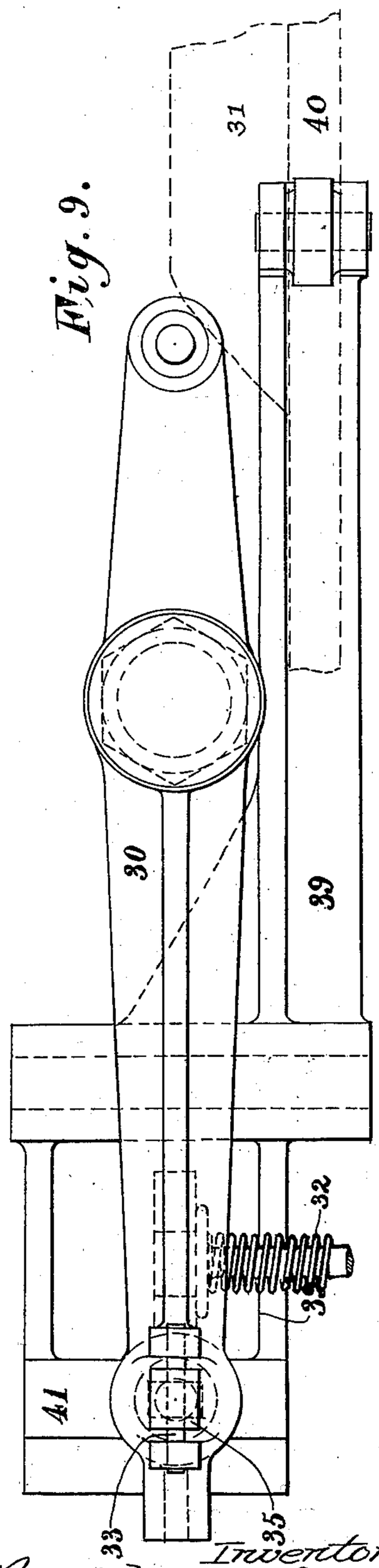

Attest
Fuller Donaldson
A. Middleton

Inventors
Robert Martin Chambers
Charles Edward Chambers
by Ellis Spear Atty.

THE NORRIS PETERS CO., PHOTO-LITHO., WASHINGTON, D. C.

No. 671,412. Patented Apr. 2, 1901.

R. M. & C. E. CHAMBERS.

MACHINE FOR WIRING CORKS OF BOTTLES.

(Application filed Dec. 8, 1900.)

(No Model.) 10 Sheets—Sheet 7.

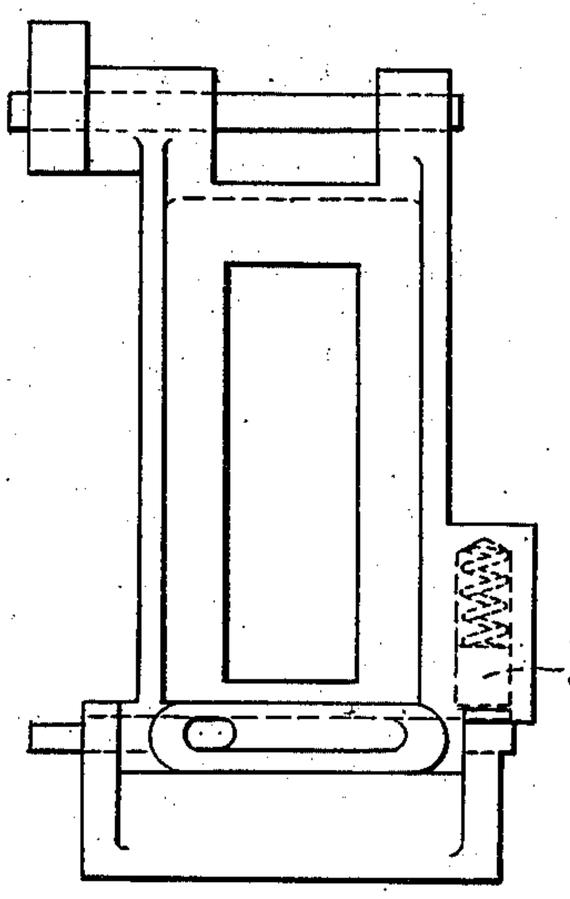

Fig. 10.

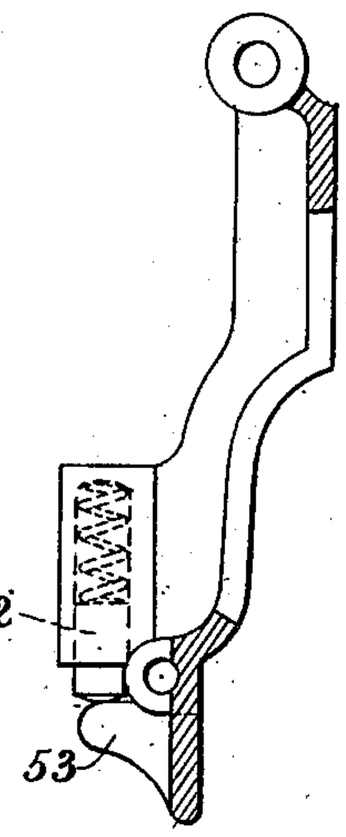

Fig. 11.

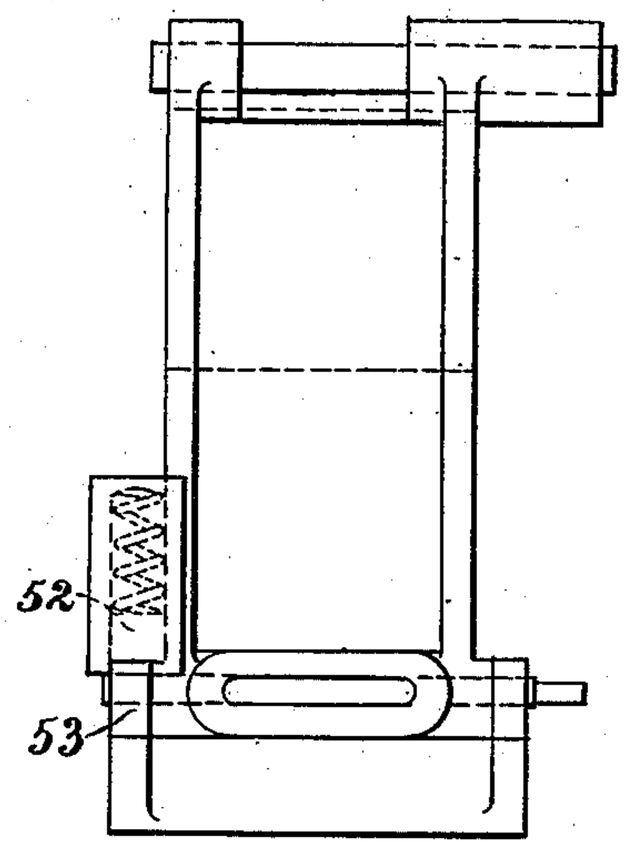

Fig. 12.

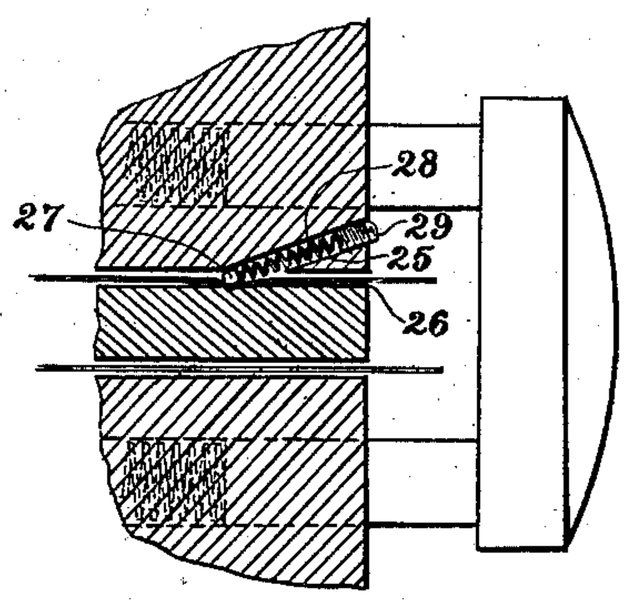

Fig. 14.

Attest
Walter Donaldson
C. McMahon

Inventors
Robert Martin Chambers
Charles Edward Chambers
by Ellis Spear Atty.

THE NORRIS PETERS CO., PHOTO-LITHO., WASHINGTON, D. C.

No. 671,412. Patented Apr. 2, 1901.

R. M. & C. E. CHAMBERS.

MACHINE FOR WIRING CORKS OF BOTTLES.

(Application filed Dec. 8, 1900.)

(No Model.) 10 Sheets—Sheet 8.

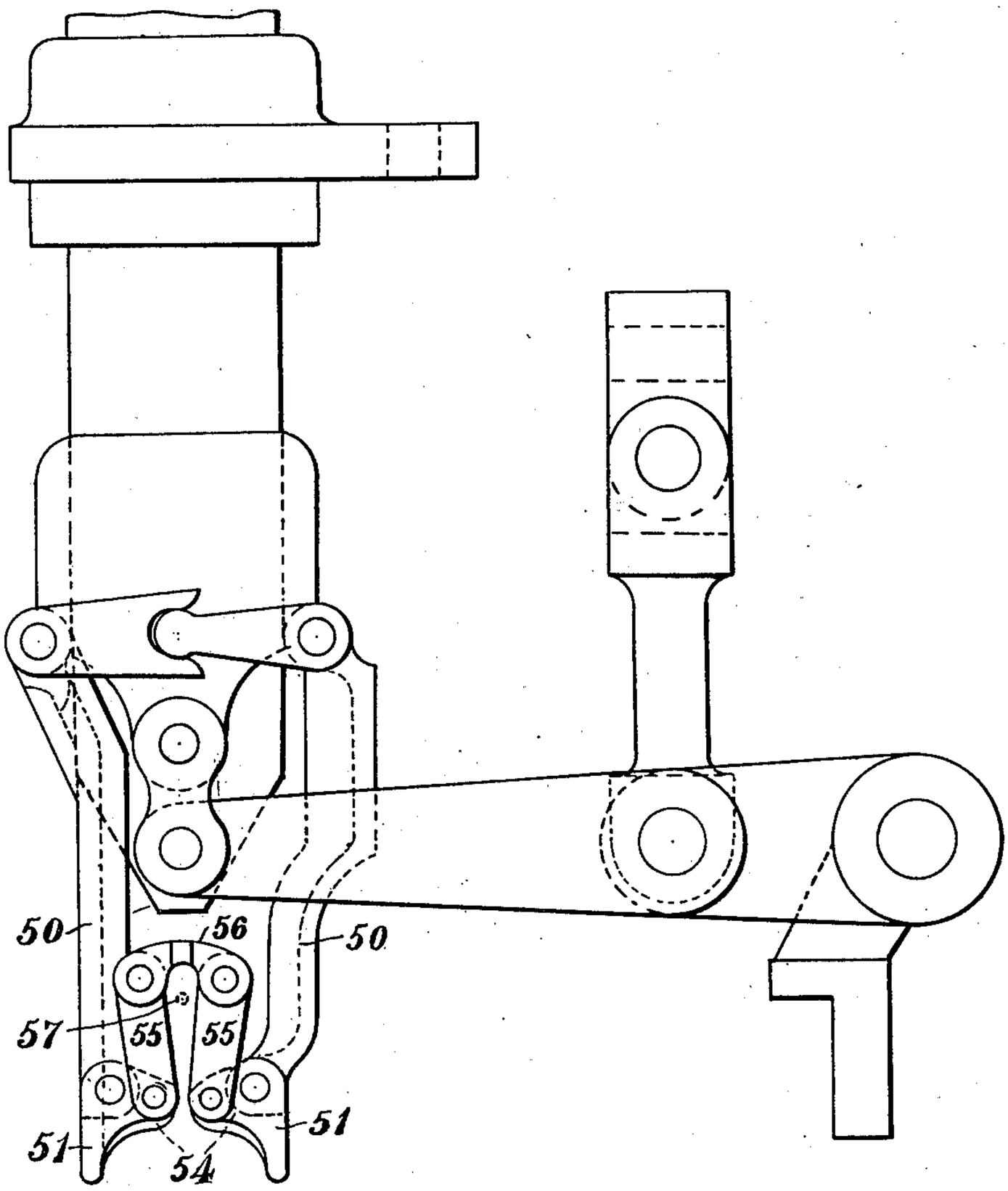

Fig. 13.

Attest
Walter Donaldson
C. S. Minnerman

Inventors
Robert Martin Chambers
Charles Edward Chambers
by Ellis Spear Attys

THE NORRIS PETERS CO., PHOTO-LITHO., WASHINGTON, D. C.

No. 671,412. Patented Apr. 2, 1901.

R. M. & C. E. CHAMBERS.

MACHINE FOR WIRING CORKS OF BOTTLES.

(Application filed Dec. 8, 1900.)

(No Model.) 10 Sheets—Sheet 9.

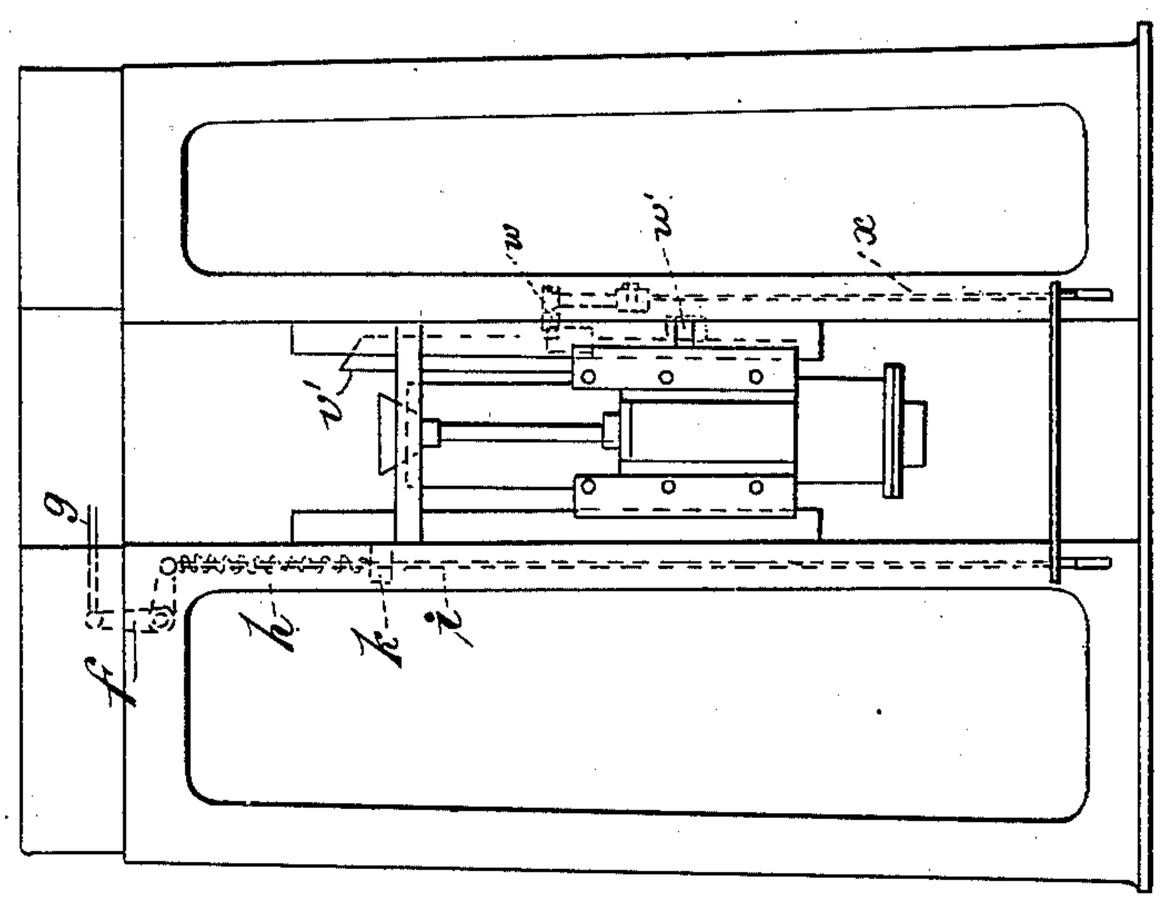

Fig. 15b.

Fig. 15

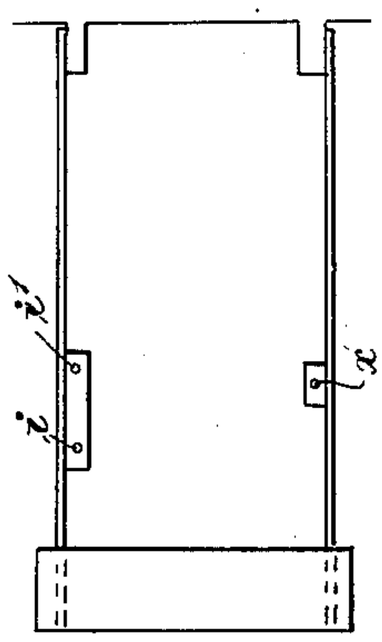

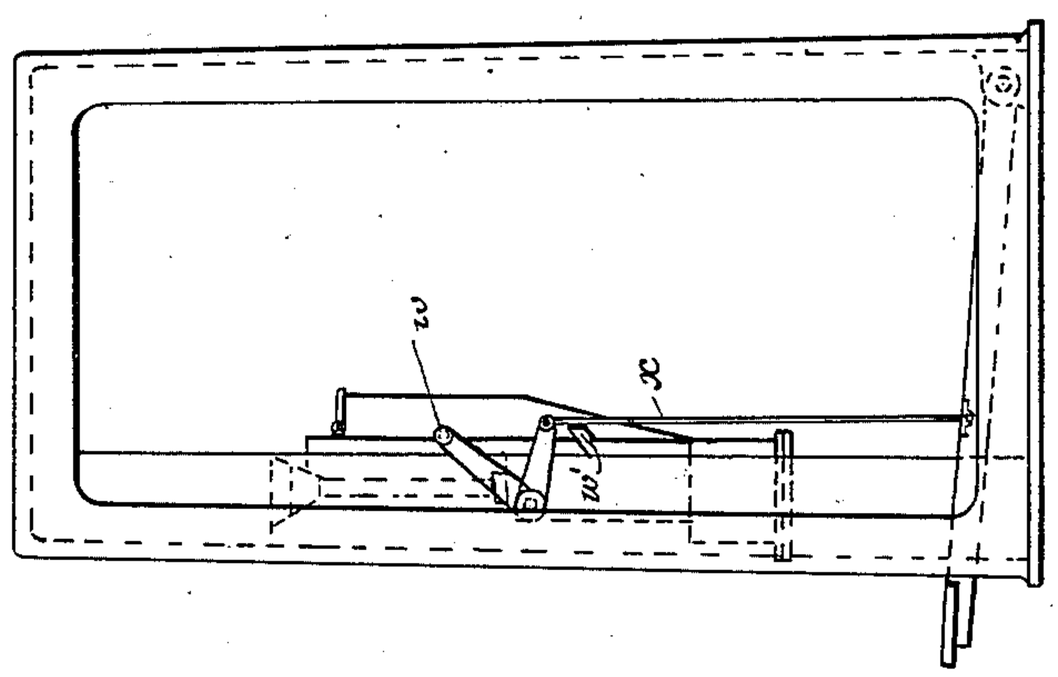

Fig. 15a.

Attest
Walter Donaldson
Edw. L. Reed.

Inventors
Robert Martin Chambers
Charles Edward Chambers
by Ellis Spear Attys

THE NORRIS PETERS CO., PHOTO-LITHO., WASHINGTON, D. C.

No. 671,412. Patented Apr. 2, 1901.

R. M. & C. E. CHAMBERS.

MACHINE FOR WIRING CORKS OF BOTTLES.

(Application filed Dec. 8, 1900.)

(No Model.) 10 Sheets—Sheet 10.

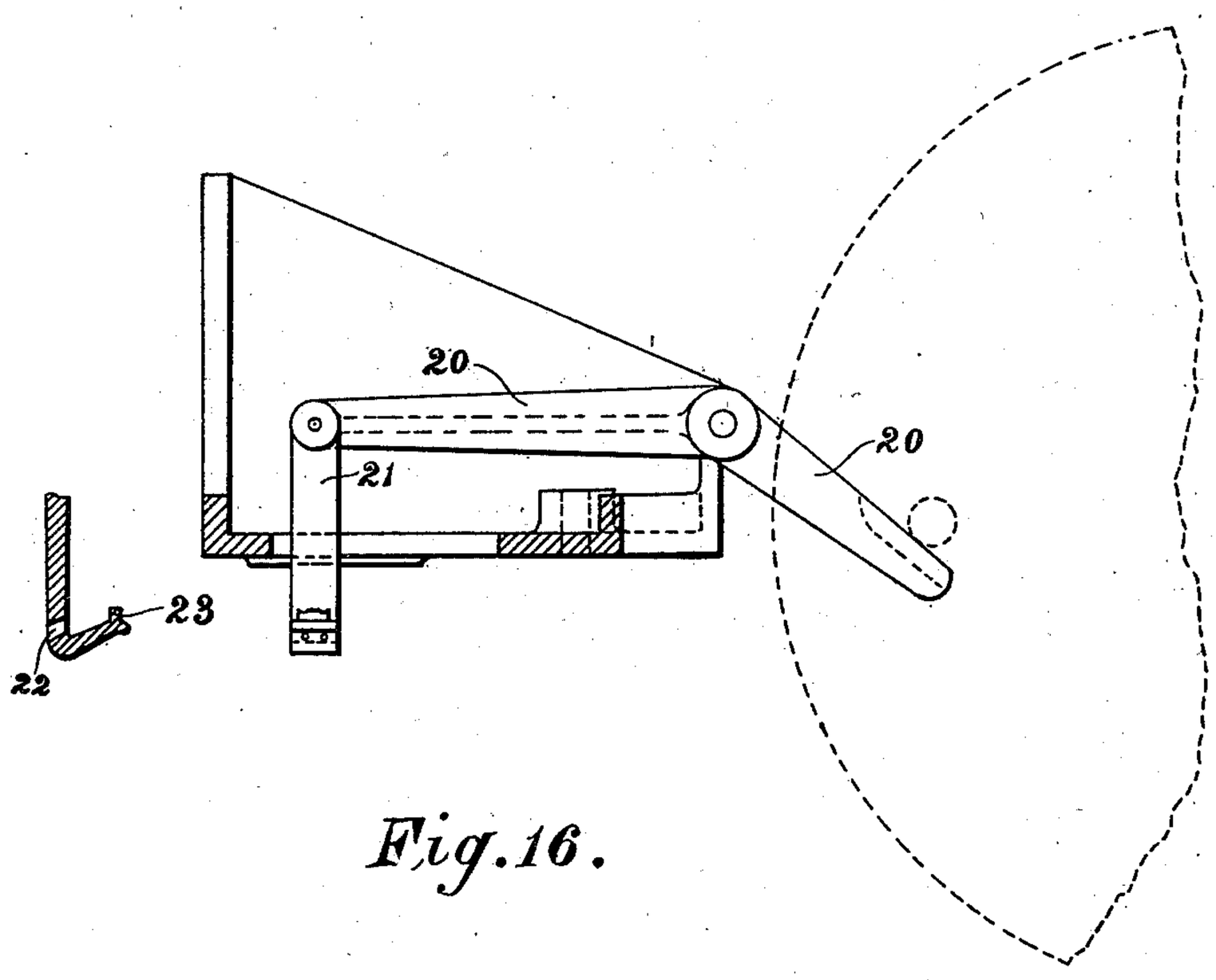

Fig. 16.

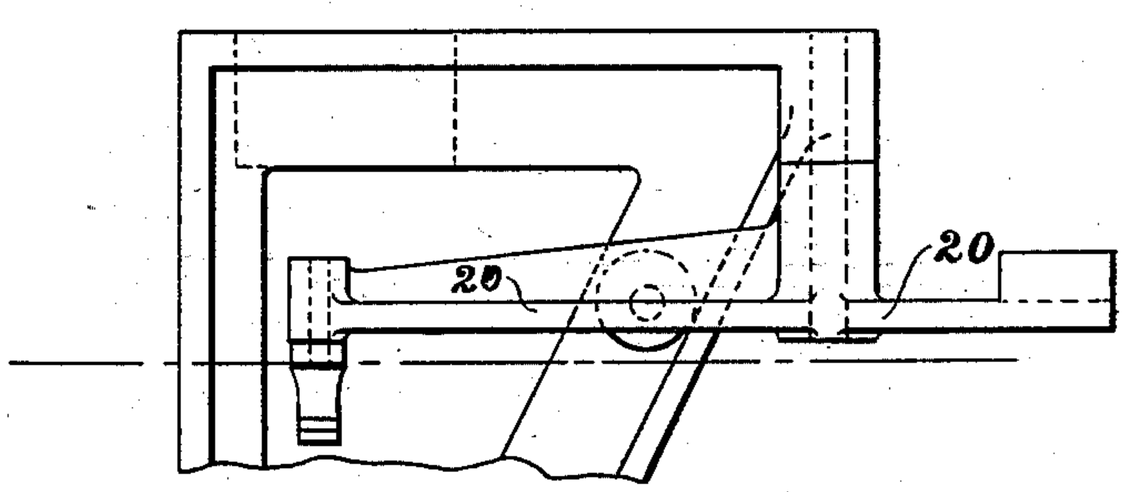

Fig. 17.

Attest
Malcolm Donaldson
Edward Reed.

Inventors
Robert Martin Chambers,
Charles Edward Chambers,
by Ellis Spear Atty

THE NORRIS PETERS CO., PHOTO-LITHO., WASHINGTON, D. C.

UNITED STATES PATENT OFFICE.

ROBERT MARTIN CHAMBERS AND CHARLES EDWARD CHAMBERS, OF BELFAST, IRELAND.

MACHINE FOR WIRING CORKS OF BOTTLES.

SPECIFICATION forming part of Letters Patent No. 671,412, dated April 2, 1901.

Application filed December 8, 1900. Serial No. 39,188. (No model.)

To all whom it may concern:

Be it known that we, ROBERT MARTIN CHAMBERS and CHARLES EDWARD CHAMBERS, engineers, subjects of the Queen of Great Britain and Ireland, residing at Cuba street, Belfast, in the county of Antrim, Ireland, have invented certain new and useful Improvements in Machines for Wiring the Corks of Bottles, (for which we have made application for a patent in Great Britain, No. 8,509, dated May 8, 1900,) of which the following is a specification.

The invention relates to improvements in machines for wiring the corks of aerated-water and other bottles, and refers more particularly to machines such as those forming the subject-matter of our Letters Patent Nos. 632,174 and 642,206.

The objects of the invention are to enable the operator to securely catch the bottle in the mechanism designed to receive it before the machine starts and when the machine has started to mechanically remove from the reels and measure off the correct quantity of wire to pass over the cork of the bottle, whatever be the length or height of the cork, before the bottle is raised to be tied, to bring these wires closer to each other on top of the corks, to simplify the methods heretofore used for placing tension on the wire, and to bend the tied ends down more definitely against the bottle-neck.

The invention consists in the application of mechanism, constructed and arranged as hereinafter described, to a bottle-wiring machine so as to effect the functions above specified in an efficient and expeditious manner.

The invention is illustrated in the accompanying drawings as applied to a wiring-machine such as described in the specifications to the Letters Patent before referred to, the mechanism other than that directly connected with the present invention, however, being omitted for the sake of clearness. The action of such mechanism will be understood on reference to the said specifications.

Figure 1 is a front elevation of the machine. Fig. 2 is a partial plan of the same. Figs. 3 and 4 are a back elevation and a plan of the bottle-holding gear. Figs. 5, 6, and 7 are a sectional elevation, a side elevation, and a transverse section, respectively, of the cork-compressing gear, also showing the means for measuring off the correct quantity of wire according to the height of the cork. Figs. 8 and 9 are a sectional elevation and a plan, respectively, of the tension-gear. Figs. 10, 11, 12, and 13 are detail views of the means for bending down the tied ends of the wire. Fig. 14 is a detail illustrating a simple device located in the twisting-spindle for preventing a return of the top wires after they have once been fed forward; otherwise the twisting-spindle is similar to that described in specification No. 642,206. Figs. 15, 15[a], and 15[b] are detail views illustrating a treadle connection. Figs. 16 and 17 are respectively an elevation and a plan of a device for kinking some of the wires for the purpose of preventing the return of said wires.

In the drawings similar parts are indicated by similar characters of reference.

The bottle to be wired is placed between two self-centering jaws *a a*, pivoted on bolts *b b*, attached to the machine-frame, preferably held up or steadied by a plate *c*, secured by a bolt *d*. The jaws, however, might be pivoted to a bracket bolted to the frame—such, for instance, as the bracket *e*, which is recessed to receive the jaws. One arm or jaw is connected to one arm of a bell-crank lever *f* by a connecting-rod *g*, which is capable of considerable compression in the direction of its length. The other arm of the lever *f* is connected by a rod *i* to a foot-treadle situated at the base of the machine. A spring *h* surrounds the rod *i* and acts against a lug *k* and the bell-crank lever *f*, so as to normally hold the jaws *a a* open. The jaws are closed on depression of the treadle, the connecting-rod *g* allowing the same to be further depressed for purposes hereinafter set forth. For locking the gripping-jaws on the bottle-neck so that they cannot be opened till the lock is withdrawn, the jaws are extended rearwardly past their pivots *b b*. On this portion of the jaws, on the inside, inclined planes *l l* are formed. These planes are engaged by correspondingly-shaped planes formed on a block *m*, adapted to slide on a guide-rod *o*, carried by the bracket *e*. The block is forced up, so as to lock the jaws *a a*, by a spring *p*

when released by a suitable latch, such as *q*, consisting of a block sliding in a guide on the bracket *e* and adapted to be moved in or out of the path of a suitable projection, such as the pin *r*, on the block *m*. This latch is connected by a rod *s* and other suitable means to the treadle, so that when the bottle-holding jaws are closed by a depression of the treadle a slight further depression will withdraw the latch *q* and allow the block *m* to lock the jaws. The starting-gear, which is similar to that described in the before-mentioned specifications, and the push-rod described in the later specification, No. 642,206, are also connected with the treadle, as at *i'*, Fig. 15, so that after the latch has been withdrawn and the jaws locked a still further depression of the treadle will start the machine.

In order that the jaws may be opened when the lifting-bracket starts to raise the bottle, so as to allow the bottle to pass between them, means are provided operated from the lifting-bracket by which the locking-wedge *m* is withdrawn and the jaws opened. Such means consist, in the first case, of a bell-crank lever *t*, pivoted to the bracket *e* and connected by a link *u* to the block *m*. The lower arm of the lever *t* carries a roller *v*, which when it is desired to withdraw the block *m* is engaged by a cam-plate *v'*, Fig. 15[b], on the lifting-bracket.

To insure that the jaws *a a* shall open just before the bottle starts to rise, a projection or cam-plate *w'*, Fig. 15[a], on the lifting-bracket engages a bell-crank lever *w*, connected by a rod *x* with the treadle, so that as the lifting-bracket rises the treadle is forced up and through the connecting-rod *i* and bell-crank *f* opens the jaws *a a*. The position of the bell-crank *w* must be arranged so that the jaws are opened just before the lifting-bracket starts to lift the bottle. The spring *h* aids this opening action; but the means just described render the opening positive. The compressor for compressing the cork and holding the capsule thereon acts somewhat similarly to that described in specification No. 642,206, but in the present case is provided with means for centering the wires on the top of the cork and also with means for measuring off the correct quantity of wire to pass over the cork of the bottle whatever be the length or height of the cork. The compressor is shown in detail in Figs. 5, 6, and 7. The plunger 2 for compressing the cork works vertically within a tube or guide 3 and receives its motion from a cam through a lever 4, which is linked to a cross-head 5, acting upon the plunger through a buffer-spring 6. The plunger is attached to a rod 7, on which the spring 6 is wound, said rod sliding through the cross-head 5 and terminating in a collar 8. The plunger is preferably cylindrical in form at the top, but is extended downwardly in the shape of a central blade 9, capable of passing between the top wires and reaching downwardly through them till it reaches the top of the lowest cork, when the bottle is held in the gripping-jaws *a a*. Just under the cylindrical portion of the plunger and clear above the wire when the plunger is at its lowest position are hinged two side pieces 10, one on each side of the blade and of equal length to the blade. The side pieces pass downwardly on the outside of the top wires and are normally held apart by springs 11. Their backs are engaged by guides 12 12 and are shaped in such a manner that as the presser descends they remain open under the action of the springs until the point of the blade 9 has passed through, and the side pieces outside the wires, when raised portions 13 13 engage the guides 12 12, the arms 10 being thereby forced toward each other, so as to draw the wires in almost against the blade. They are held in this position by the guides 12 12 until the plunger or presser engages the cork, the openings between the side pieces and the blade when so held being such that they pass quite freely over the wires. The hinges 14 of the side pieces are a free fit for their pivots and they bear on their top ends outside these pivots against the bottom of the cylindrical portion of the plunger, so that when a pressure is applied to their bottom ends by the resistance of the cork they are held against the blade by the pressure on the part outside the pivot acting on them as bell-cranks and overcoming the inclination of the springs 11 to force them outward. Thus when the presser or plunger rises with a bottle held firmly between it and the table of the lifting-bracket (as described in specification No. 642,206) the side pieces 10 do not open till the pressure is again relieved by the descent of the lifting-bracket, although they are free of their guides in the upper part of the stroke of the presser. To remove the correct amount of wire from the reels to suit varying heights of corks, so that it is not necessary to draw said wire over the cork as it rises, as described in specification No. 642,206, which method is liable to break the wire, a small crutch 15 is provided, having a cross-piece 16. The long bar of the crutch slides vertically in the presser and has a rack 17 capable of being engaged by a pawl 18, pivoted to and moving with the cross-head; but the pawl is normally held out of engagemdnt by the collar 8, attached to the plunger-rod 7 in such a way that when the buffer-spring 6 is compressed the collar moves upwardly relatively to the cross-head, the pawl immediately engages the rack on the crutch, and the crutch then moves down with the cross-head during the remainder of its stroke. The action of this gear is as follows: When the machine is started and the presser begins to descend toward the cork, the cross-piece 16 rests on the two top wires, which support it, the presser sliding freely past it until it reaches the cork, when the buffer-spring 6 begins to compress and the pawl 18 engages the rack 17 and the crutch

moves with the cross-head during the remainder of its stroke and pushes down a certain quantity of wire, drawing it from the reels. It is obvious that with a short cork the crutch will only be engaged for a small part of the stroke of the cross-head and a small quantity of wire will be taken from the reels, while with a high cork the crutch will be engaged at a much earlier part of its stroke and will take a proportionately larger quantity of wire from the reels. To prevent the wire from returning toward the reels when it has been withdrawn, we provide a simple arrangement of lever, which kinks the wire outside its guides from the reels and prevents its returning through the guides. This device is illustrated in detail in Figs. 16 and 17. A lever 20, pivoted to the machine-frame, is rocked by a projection on one of the gear-wheels of the machine or by a cam or similar means. The lever 20 carries a depending bar 21, having a curved termination or hook provided with a slot 22 for the wire to pass through, and a projection or lip 23, over which the wire has to pass. When the lever 20 is rocked, a slight kink is applied to the wire for the reasons above stated, the feeding of the wire from the reels 24 being at the same time assisted.

A very effective means employed for preventing the top wires passing backwardly through the twisting-spindle is shown in Fig. 14. An inclined hole 25 is drilled to meet each top-wire-guiding hole 26 in the twisting-spindle, and in the recess formed at the junction of the two holes a small metal ball 27 is inserted and kept pressed down onto the wires by a small spring 28, held in position by a screwed plug 29. The ball 27 will allow the wire to move forward, but not backward.

To put the required tension on the bottom wires and draw up any slackness in them after they have been released by the side hooks, as described in the specifications before referred to, a lever 30, Figs. 8 and 9, is provided, moved toward the twisting-spindle by a cam 31 and drawn or forced away from it by a spring 32, the said lever moving in a horizontal plane. An arrangement for gripping the wires, consisting of a cross-bar 33, is attached to a vertical boss on the end of the lever and across the line of the wires. Working within the boss is a bar 34, to which is loosely attached a strap 35, passing over the bar 33 and provided with holes 36 for the wire, the gripping-bar being acted on by a spring 37, which presses the strap 35 against the cross-bar 33, the two normally gripping the wire between them. To disengage the strap from the cross-bar and release the wires, so that they can slide through freely, the gripping-bar 34 is extended through the bottom of the boss of the lever 30 and a roller 38 is fitted to its lower end, said roller being engaged by a second lever 39, acted on by a cam 40 and moving in a vertical plane. This lever, afterward called the "releasing-lever," has a slide 41 formed at its end under the bar 34 and is adapted to engage the said bar at any portion of its stroke. When the releasing-lever is acted on by its cam, it pushes the gripping-bar upward and releases the wires, allowing them to pass freely through the strap 35. The action of this gear is as follows: When it is desired to grip the wire, the tension-lever 30 is first moved forward by its cam. While it is doing so the releasing-lever presses the gripping-bar 34 up, leaving the strap 35 free to slide over the wires. Then the releasing-lever is first allowed to disengage from the gripping-bar, which under the action of its spring brings the strap down and grips the wire. Next the tension-cam 31 releases its lever, leaving it free, so that the full force of its spring is brought on the wires, drawing up any slackness in them and keeping the wires in tension until it is again desired to release, when the releasing-lever is acted on by its cam and again engages the gripping-bar, forcing it upward and releasing the wires.

In specification No. 642,206 means are described for bending down the twisted ends of wire at the completion of the wiring operation. These means consisted of levers or arms which were forced down on each side of the bottle-neck at the desired time. Similar levers 50 are employed in the present invention; but to more effectively press the twisted ends in against the bottle-neck the lower portion of each lever 50 is hinged, as shown in Figs. 10 to 13. The hinged portions 51 are so formed that they can turn inward, but not outward, and are normally held in line with the fixed portion by spring-plungers 52 or the like acting on small projections 53, formed on them. The hinged portions 51 are provided with bell-cranks 54, to which are attached links 55, connected by a third link 56, which is acted on by a stop 57, Figs. 1 and 13, attached to a fixed portion of the machine and so placed that it engages the link 56 when the bending-down levers 50 approach the end of their downward stroke. This action through the links draws the bell-cranks upwardly, which brings the lower ends of the hinged pieces inwardly just below the collar on the bottle-neck and folds them in tightly. The levers again rising, the tension on the links being relieved, the spring-plungers 52 bring them back to their former position.

Having thus described our invention, what we claim, and desire to secure by Letters Patent, is—

1. In a bottle-wiring machine, means for securely holding the bottle previous to the wiring operation comprising self-centering pivoted jaws normally held apart by a spring and adapted to be closed by the depression of a treadle through the medium of a connecting-rod, capable of compression in its length, and a bell-crank lever and rod connecting the same to the treadle, substantially as hereinbefore described and illustrated.

2. In a bottle-wiring machine, in combination self-centering gripping-jaws for temporarily holding the bottle, a spring connecting-rod capable of compression in its length, a bell-crank lever and rod connecting the same to the treadle and means for locking the jaws when desired, comprising a wedge-block adapted to engage with corresponding recesses formed in rear extensions of said gripping-jaws, a spring for causing said engagement, a vertical guide for said wedge-block, a retaining-latch operated from the treadle, a bell-crank lever linked to the wedge-block and a cam-plate on the lifting-bracket to engage said bell-crank lever, substantially as and for the purposes described and as illustrated.

3. In a bottle-wiring machine, in combination self-centering bottle-holding jaws, a spring connecting-rod capable of compression in its length, a bell-crank lever and rod connecting the same with the treadle, a locking wedge-block adapted to engage corresponding recesses formed in rear extensions of said gripping-jaws, a spring for causing said engagement, a vertical guide for said wedge-block, a retaining-latch operated from the treadle, a bell-crank lever linked to the wedge-block, a cam-plate on the lifting-bracket to engage said bell-crank lever, and means for positively opening the bottle-holding jaws consisting of a bell-crank lever on the frame of the machine and connected by a rod to the treadle, and a cam-plate or projection on the lifting-bracket to engage said bell-crank lever, substantially as and for the purposes hereinbefore described.

4. In a bottle-wiring machine, in combination a compressor or plunger formed with a central fixed blade and hinged side blades, a tubular guide for said plunger, guide pieces or projections on the foot of said tubular guide, projecting faces on the hinged side blades to engage said projections, a buffer-spring, a sliding cross-head linked to a cam-operated lever, a collar on the upper end of the plunger and means for measuring off the required length of wire according to the height of bottle-cork consisting of a crutch sliding in said compressor and having a cross-bar to engage the wire, said crutch being supported by a bracket fixed to the cross-head, a spring-controlled pawl on said bracket adapted to engage with a rack on the crutch, substantially as and for the purposes hereinbefore described.

5. In a bottle-wiring machine, means for periodically applying tension to the wire comprising in combination a pivoted lever moved forwardly by a cam and rearwardly by a spring, a vertical bar in a boss in the end of the said lever, a perforated and loosely-attached strap on the top of said bar adapted to grip the wire against a horizontal cross-bar fixed on the lever across the line of wire, a spring for forcing down the vertical bar, a roller on bottom end of said bar, and a second pivoted lever carrying a projecting slide or table on one end periodically moved up into engagement with the roller on said vertical bar by a cam, substantially as and for the purposes hereinbefore described and set forth.

6. In a bottle-wiring machine, in combination means for bending down the tied ends of wire and forcing them definitely in against the bottle-neck comprising levers pivoted to a sleeve moved on a vertical tubular guide by a lever pivoted to the machine-frame and linked to said sleeve and also to a cam-operated lever, hinged pieces on the bottom portions of said levers, spring-plungers for normally holding said pieces in line with the levers, bell-cranks formed on said hinged pieces, links connecting said bell-cranks with a third link adapted to engage a fixed stop on the machine-frame, substantially as and for the purposes hereinbefore described and set forth.

7. In a bottle-wiring machine, in combination means for kinking the top wires and assisting the same off their reels comprising a cam-operated lever pivoted to the machine-frame, a vertical rod or bar depending from the end thereof and having a hook-shaped extremity provided with a slot and projecting edge or lug for imparting a kink to the wire, substantially as and for the purposes hereinbefore described.

8. In a bottle-wiring machine, means for preventing the return of the top wires through the twisting-spindle comprising a ball situated in a recess formed in the wire-holes of the twisting-spindle, and held against the wire by a spring, substantially as hereinbefore described and set forth.

In witness whereof we have hereunto set our hands in presence of two witnesses.

ROBERT MARTIN CHAMBERS.
CHARLES EDWARD CHAMBERS.

Witnesses:
SAMUEL GLOVER,
ROBERT BOYD.