No. 629,421. Patented July 25, 1899.

R. BROWN & J. QUINN.

HEMSTITCH SEWING MACHINE.

(Application filed June 1, 1897.)

(No Model.) 6 Sheets—Sheet 1.

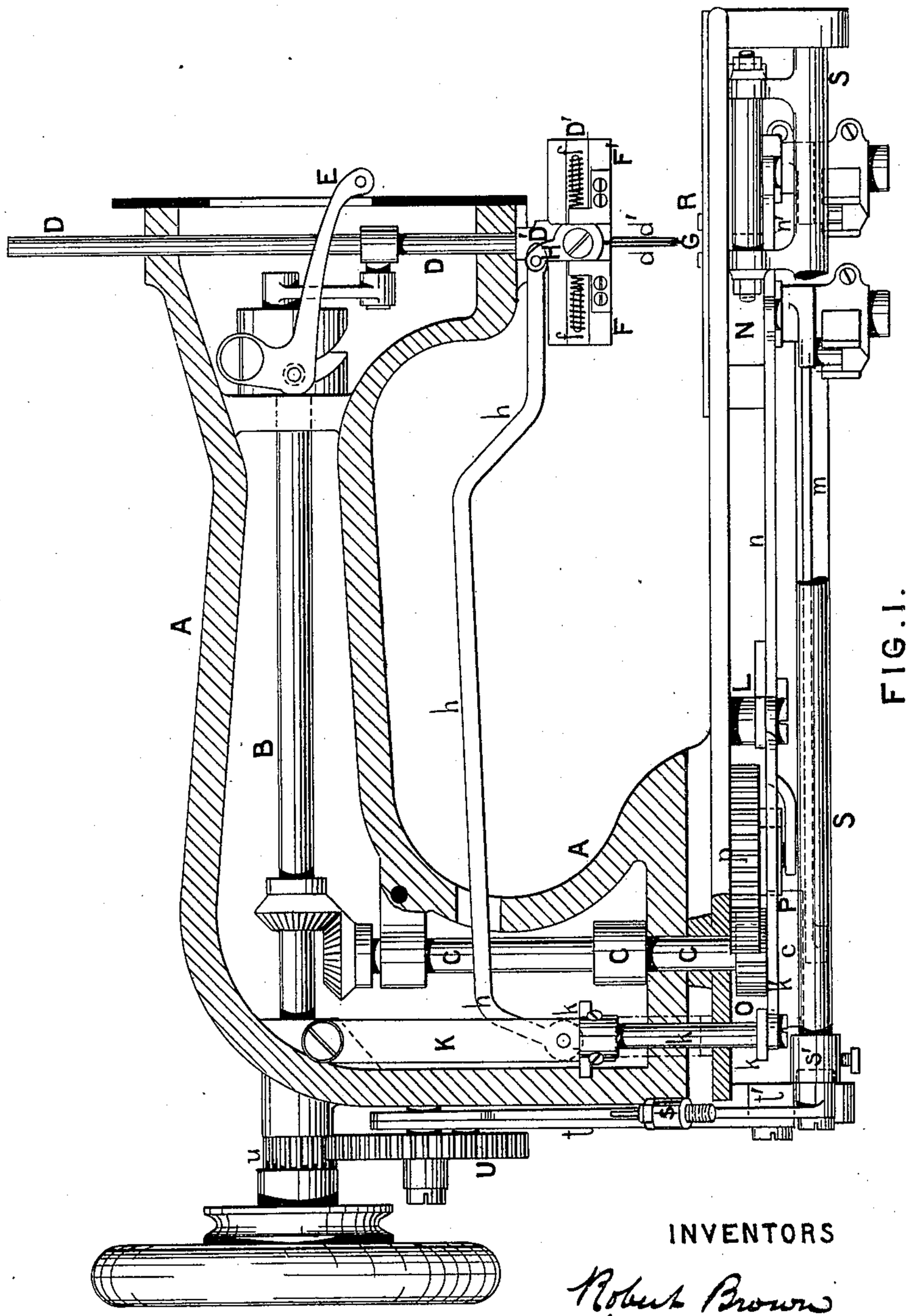

FIG. 1.

WITNESSES

Joseph Bates.

E. Howard.

INVENTORS

Robert Brown

John Quinn

by Wm. Simpson Co.

attys.

THE NORRIS PETERS CO., PHOTO-LITHO., WASHINGTON, D. C.

No. 629,421.

Patented July 25, 1899.

R. BROWN & J. QUINN.

HEMSTITCH SEWING MACHINE.

(Application filed June 1, 1897.)

(No Model.)

6 Sheets—Sheet 2.

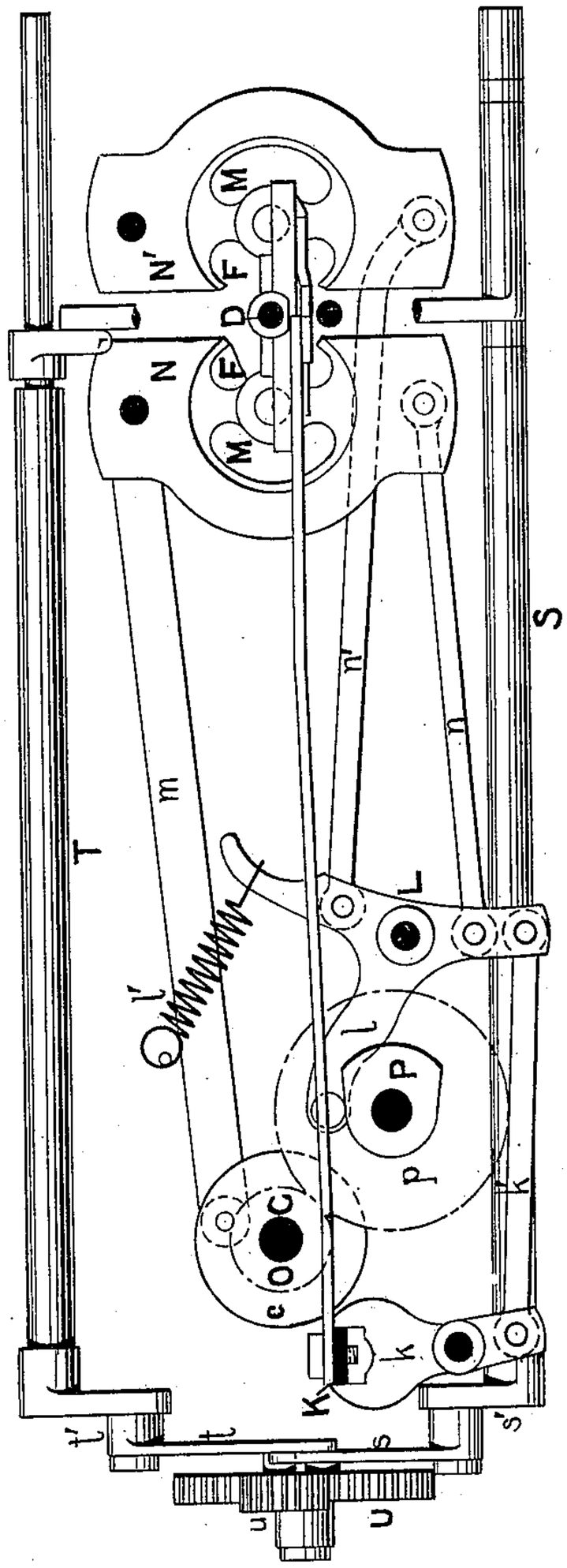

FIG. 2.

WITNESSES

Joseph Bates.

E. Howard.

INVENTORS

Robert Brown

John Quinn

by Wm. Pugh Simpson & Co

Attys.

THE NORRIS PETERS CO., PHOTO-LITHO., WASHINGTON, D. C.

No. 629,421. Patented July 25. 1899.

R. BROWN & J. QUINN.

HEMSTITCH SEWING MACHINE.

(Application filed June 1, 1897.)

(No Model.) 6 Sheets—Sheet 3.

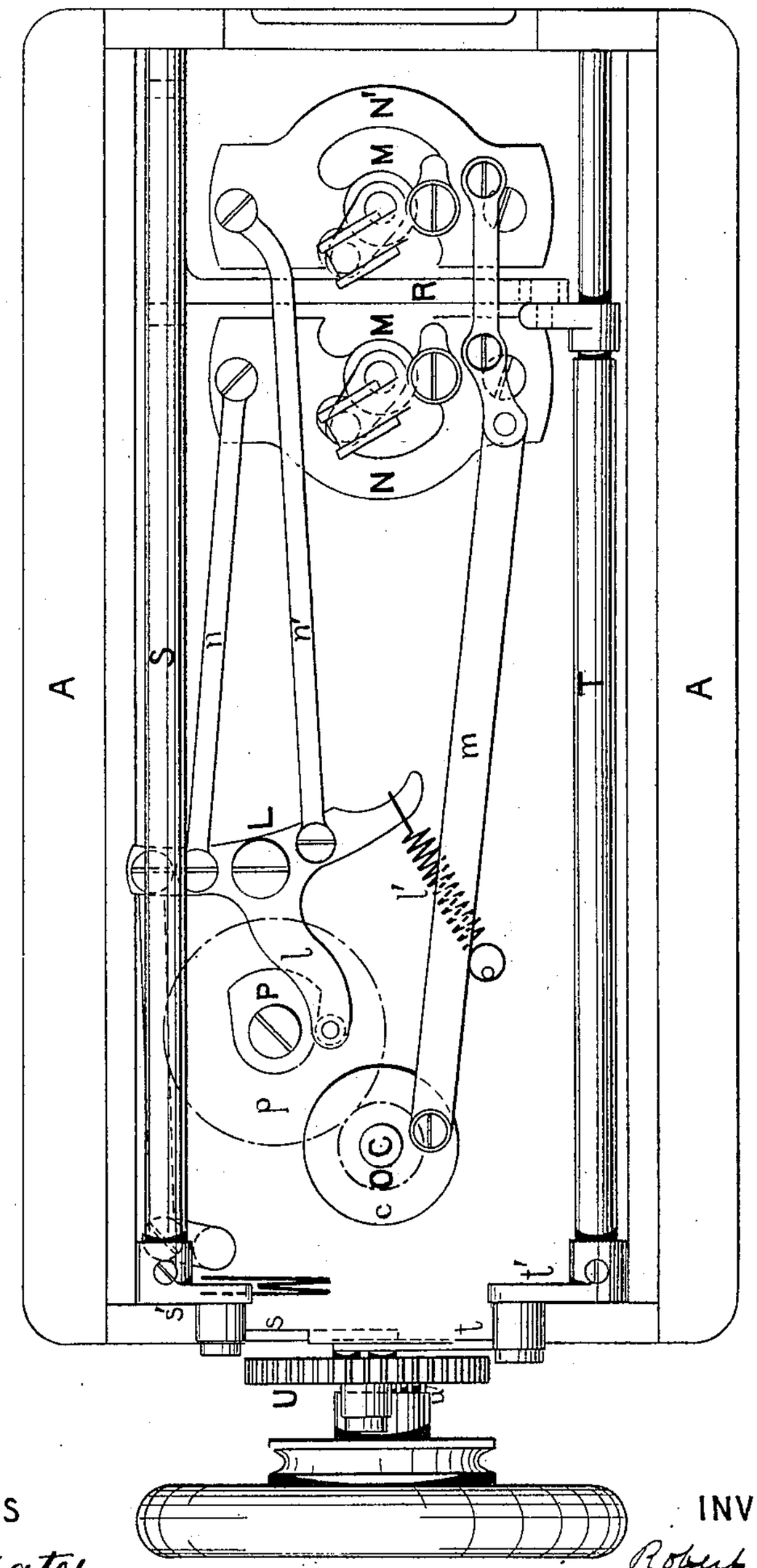

FIG. 3.

WITNESSES

Joseph Bates.

E. Howard.

INVENTORS

Robert Brown

John Quinn

by Thompson & Co

attys

THE NORRIS PETERS CO., PHOTO-LITHO., WASHINGTON, D. C.

No. 629,421. Patented July 25, 1899.

R. BROWN & J. QUINN.

HEMSTITCH SEWING MACHINE.

(Application filed June 1, 1897.)

(No Model.) 6 Sheets—Sheet 4.

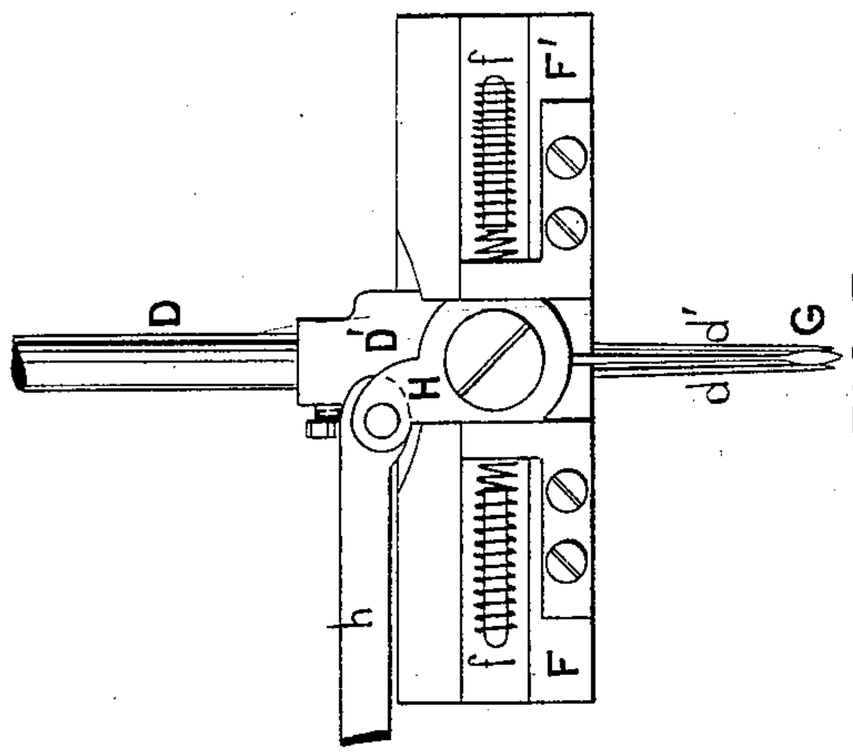

FIG. 7.

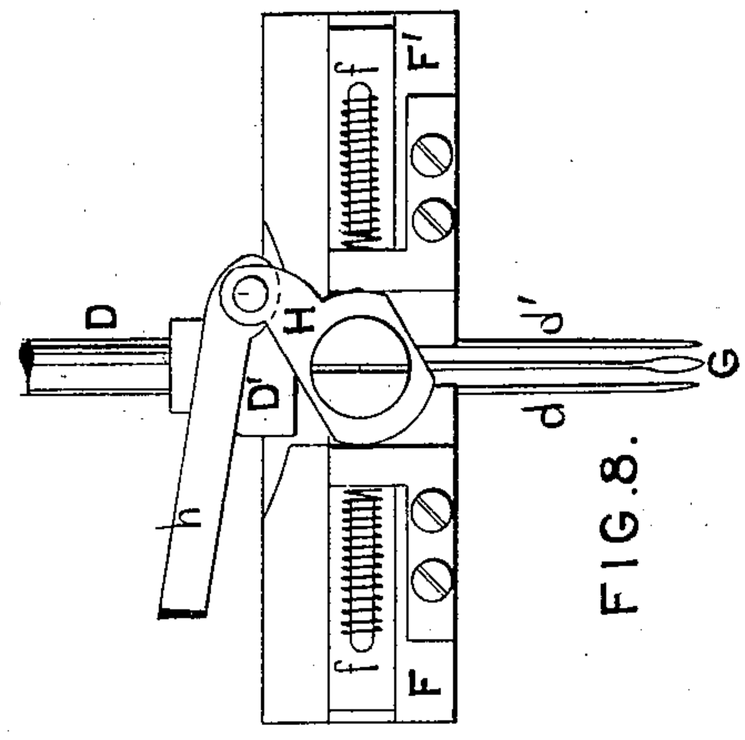

FIG. 8.

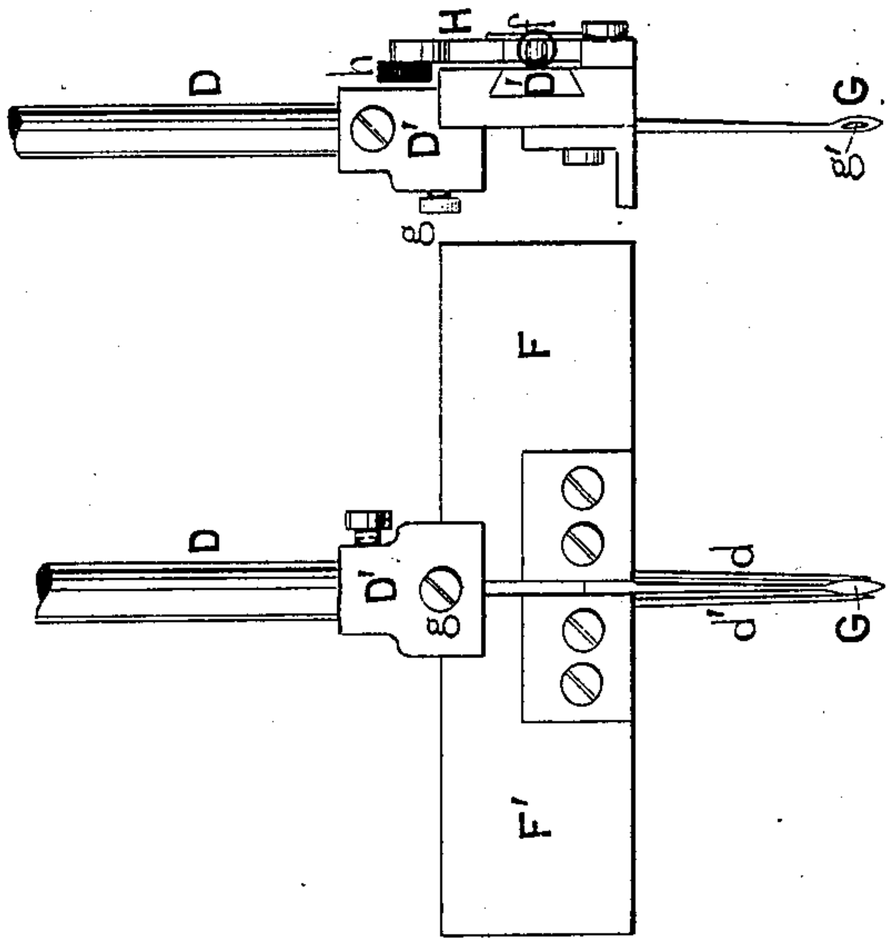

FIG. 6.

FIG. 5.

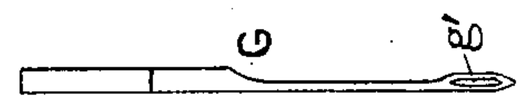

FIG. 9.

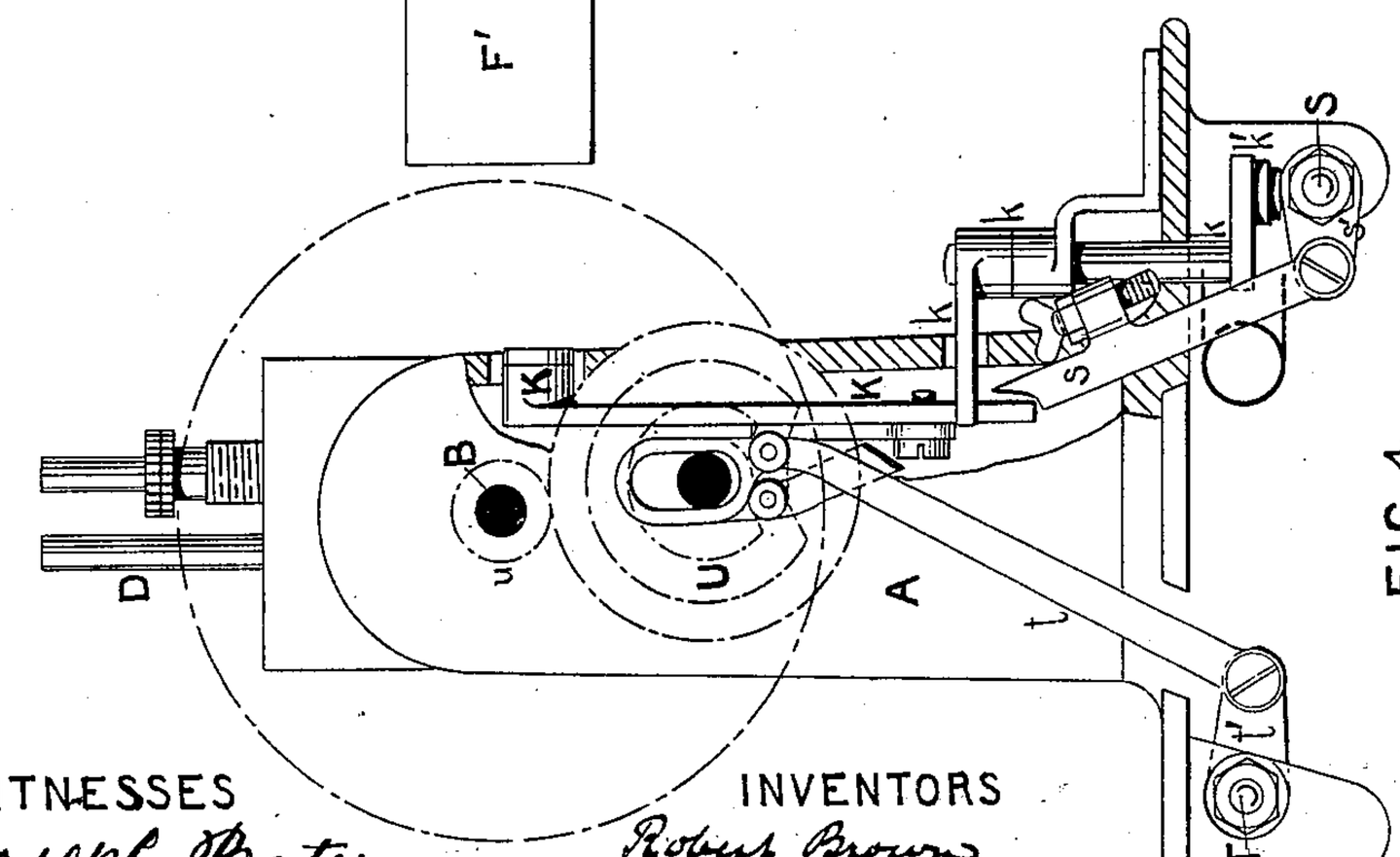

FIG. 4.

WITNESSES

Joseph Bates

E. Howard

INVENTORS

Robert Brown

John Quinn

by Wm. Simpson Co.

attys.

THE NORRIS PETERS CO., PHOTO-LITHO., WASHINGTON, D. C.

No. 629,421. Patented July 25, 1899.

R. BROWN & J. QUINN.

HEMSTITCH SEWING MACHINE.

(Application filed June 1, 1897.)

(No Model.) 6 Sheets—Sheet 5.

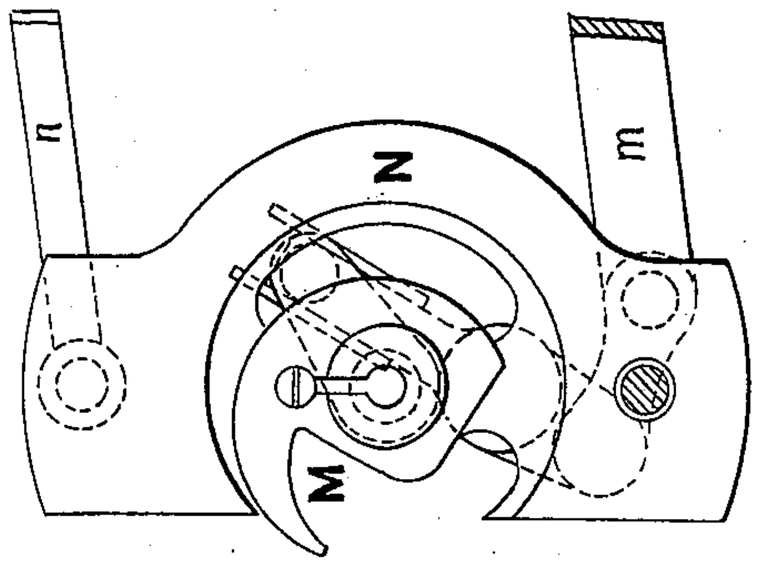

FIG. 12.

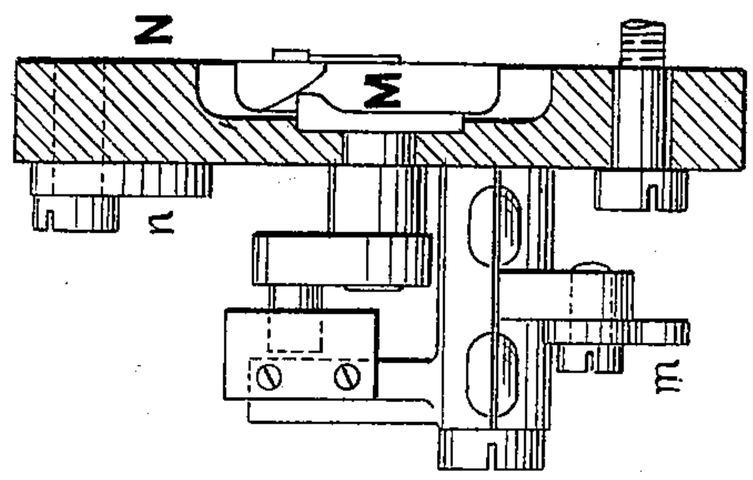

FIG. 11.

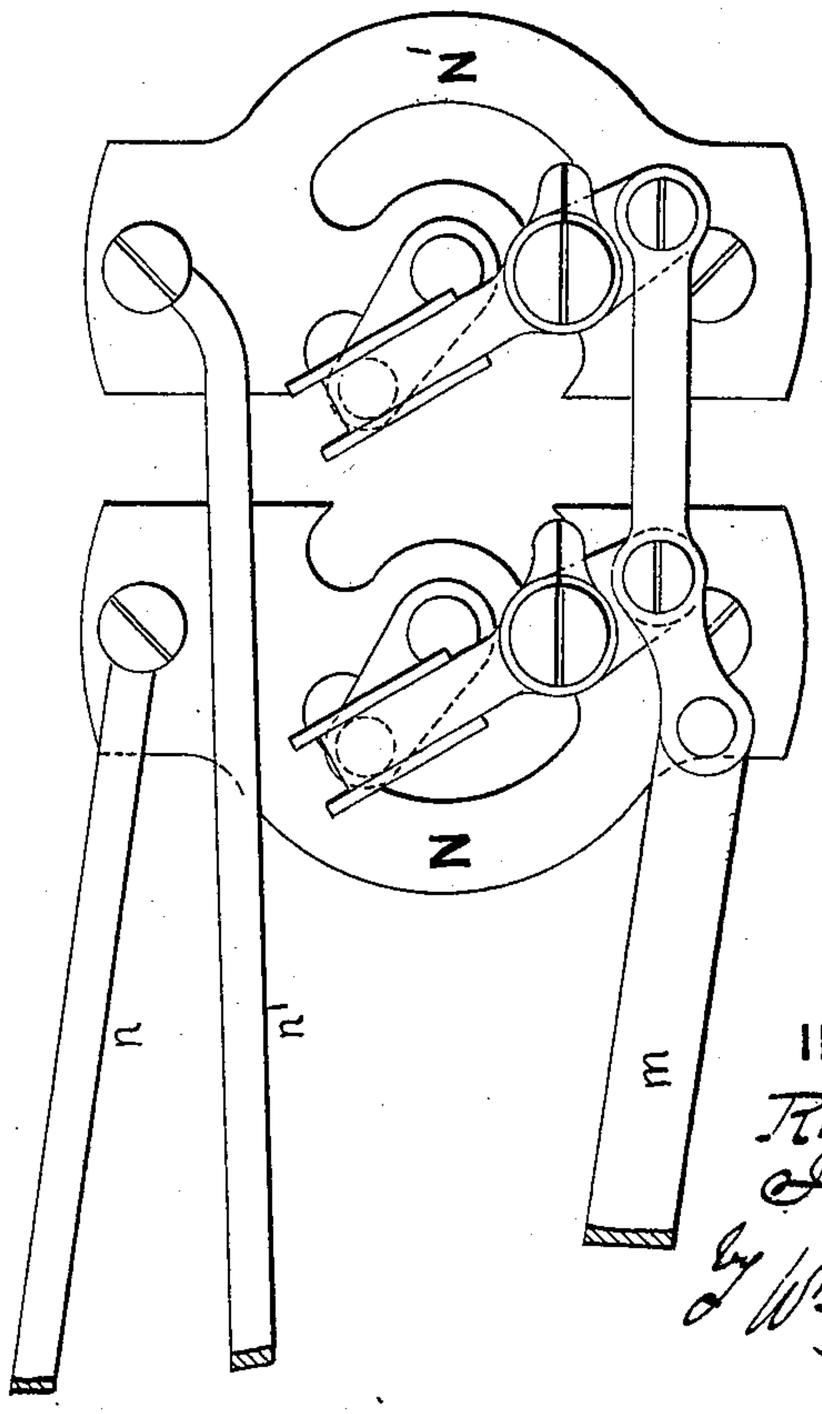

FIG. 10.

WITNESSES.

Joseph Bates.

E. Howard.

INVENTORS.

Robert Brown

John Quinn

by Wm. Henry Thompson & Co

attys.

THE NORRIS PETERS CO., PHOTO-LITHO., WASHINGTON, D. C.

No. 629,421. Patented July 25, 1899.

R. BROWN & J. QUINN.

HEMSTITCH SEWING MACHINE.

(Application filed June 1, 1897.)

(No Model.) 6 Sheets—Sheet 6.

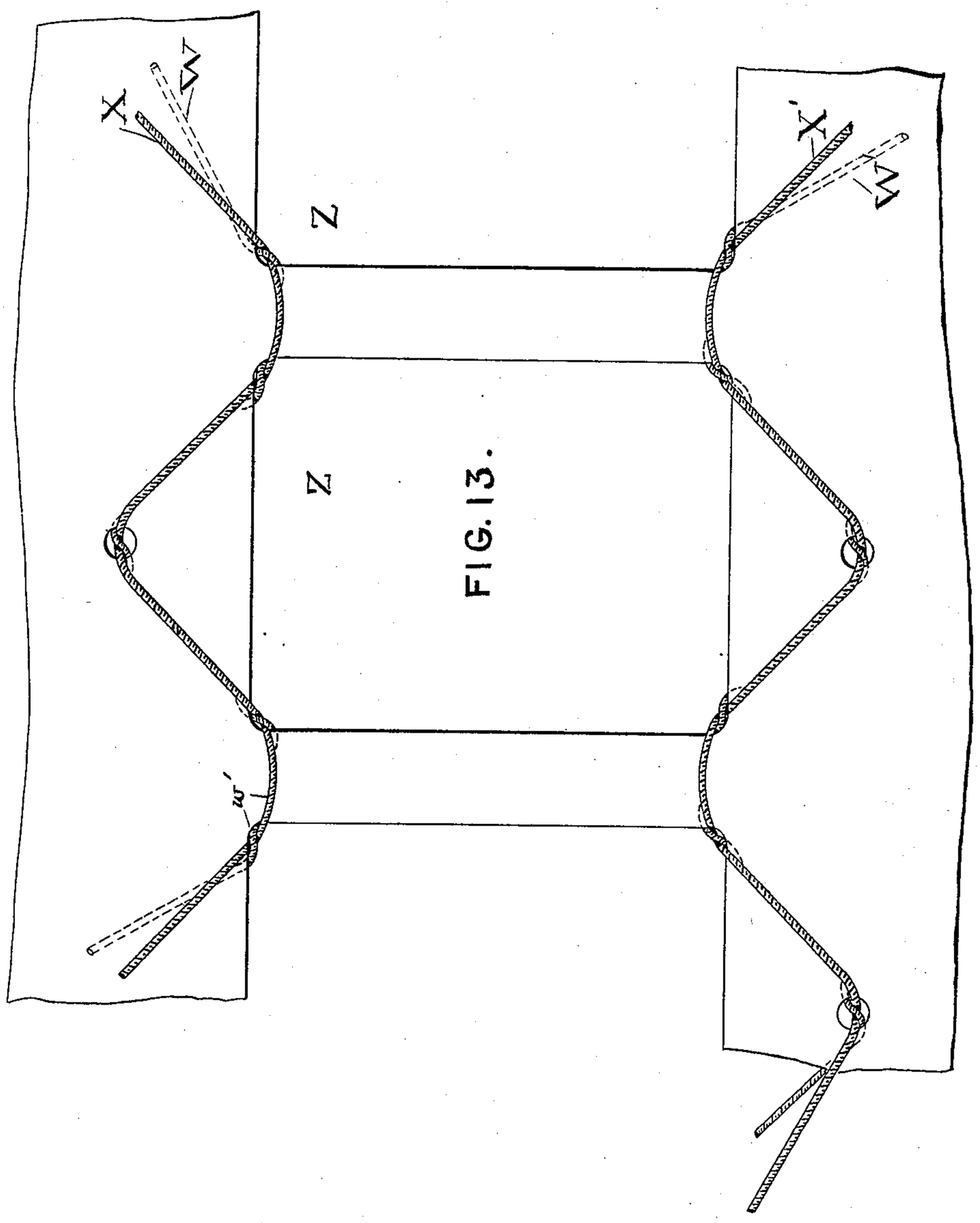

FIG. 13.

WITNESSES

Joseph Bates.

John F. Gill

INVENTORS.

Robert Brown

John Quinn

by Wm. Thompson & Co.

attys.

THE NORRIS PETERS CO., PHOTO-LITHO., WASHINGTON, D. C.

UNITED STATES PATENT OFFICE.

ROBERT BROWN AND JOHN QUINN, OF BELFAST, IRELAND.

HEMSTITCH SEWING-MACHINE.

SPECIFICATION forming part of Letters Patent No. 629,421, dated July 25, 1899.

Application filed June 1, 1897. Serial No. 639,026. (No model.)

To all whom it may concern:

Be it known that we, ROBERT BROWN, of Belfast, in the county of Antrim, and JOHN QUINN, of Belfast, in the county of Down, Ireland, subjects of the Queen of Great Britain, have invented certain new and useful Improvements in Fancy-Stitch Sewing-Machines, of which the following is a specification.

This invention relates to sewing-machines in which fancy or ornamental stitches are produced, such as what are known as "spoke stitch" and "shire stitch," by means of two needles operating in conjunction with a punch, one needle on either side.

This invention is designed to provide improved mechanism for controlling or actuating such needles and for maintaining the shuttles always in the same relative position to the needles.

The invention will be fully described with reference to the accompanying drawings, which as an example show it applied to a machine for overseam stitching with oscillating hooks of the Singer type.

Figure 1 is a side elevation from the back, partly in section; Fig. 2, a plan, partly in section, with the top plate and framing removed; Fig. 3, a plan looking from beneath; Fig. 4, an end elevation showing the gearing end of the machine; Fig. 5, an enlarged front elevation of needles and needle-clamps; Fig. 6, a side elevation of same; Fig. 7, a back elevation of same, showing needles closed to the punch; Fig. 8, a back elevation showing the needles open or moved out of contact with the punch; Fig. 9, a side elevation of punch; Fig. 10, a detail of means for actuating shuttles; Fig. 11, a side elevation of Fig. 10, partly in section; Fig. 12, a plan of box N from the top, and Fig. 13 a diagrammatic illustration of the stitches.

The frame A of the machine, the main horizontal driving-shaft B, the vertical shaft C, the needle-bar D, and the thread-lever E are all constructed, arranged, and operated in the usual way. To the reciprocating needle-bar D we affix at the lower end a cross-head D′ to carry two needles *d d′*. The needles *d d′* are carried in clamps F F′, which are mounted upon the cross-head D′ by means of a dove-tail-shaped groove, so as to be capable of moving or sliding to and fro thereon, by which movement the needles *d d′* can be moved toward or away from the punch G. The punch G is secured in a hole in the center of the needle-bar D by a set-screw *g*. Between the sliding needle-clamps F F′ is pivoted a cam H, which is oscillated about its center by a connecting-rod *h*. This cam when oscillated from the position shown in Fig. 7 to that shown in Fig. 8 moves the sliding needle-clamps F F′ apart and moves the needles *d d′* away from the punch G. When the cam H is returned to the position shown in Fig. 7, the sliding needle-clamps are drawn back by the springs *f*.

The punch G is made with a hole *g′* near the point, which enables the points of the needles *d d′* to lie so close together as to touch one another. The connecting-rod *h*, which actuates the sliding needle-clamps, is attached at its other end to a swing-link K, which receives a reciprocating movement from a cranked lever or fork *k*, to which a to-and-fro movement is imparted by pivoted quadrant-lever L through the connecting-rod *k′*.

The shuttles or hooks M are of ordinary construction (those illustrated being of the Singer design) oscillating to and fro beneath the needles, and they are actuated in the usual way by the connecting-rod *m* and rotating disk and crank-pin *c* on the foot of the vertical shaft C.

Each of the shuttles or hooks M we mount in shuttle-races attached to pivoted shuttle-race carriers or boxes N N′, capable of being oscillated backward and forward to and from each other to correspond with the movement given to the needles, so that as the position of the needles is changed the shuttles are also changed, thus maintaining the relative position of needle and shuttle constant, thus avoiding any risk of missing stitches, which would otherwise occur.

The shuttle-race carriers or boxes N N′ are actuated by the rods *n n′*, connected to the oscillating quadrant-lever L, by which the needles are actuated, thus insuring a synchronous movement.

The quadrant-lever L is actuated in one direction by a cam P, acting upon the arm *l* of

the lever L and drawn back by the spring l'. The cam P is carried by pinion p, rotated by a pinion O on the vertical driving-shaft C.

The feed mechanism consists of a toothed or serrated feed-bar R of ordinary construction, with both vertical and lateral movement, operated by oscillating bars S and T, one placed at each side of the machine, beneath the horizontal plate of the frame A. Motion is transmitted to the bars S and T from the cam U by the connecting-rods s and t and cranks s' and t'. The cam U is provided with pinion-teeth around the periphery and is rotated by a pinion u on the end of the horizontal driving-shaft B.

The arrangement of sliding needle-clamps and the movable shuttle-race carriers or boxes is applicable for either an overseaming stitch or a hemstitch.

The construction of the punch G with a hole g' enables the needle-points to come close together, thus obviating any risk of the threads becoming jammed or caught between the needles and the punch when the needles are closed in to punch, and also enables the machine to make a narrower stitch with less space between the two rows of stitches by allowing the needles to come closer together or touch at their points. The needles, with the punch, enter the cloth, making one hole. The next stitch the needles, being moved away, pass into the material at the side of the hole. The next stitch the needles close into the punch and enter the hole made at first stitch, thus completing the hole made at first stitch. Then the material is fed forward from the punch and needles to repeat.

Fig. 12 of the drawings shows an enlarged view of stitches, in which W and W′ are the needle-threads, and X X′ the shuttle or under threads. In forming the stitch the needles and punch are passed through the material, forming a hole in it, and the threads from the needles make loops at each end of the hole Z, which are looped by the under shuttle-thread. The needles on being raised by the needle-bar expand and are passed through the material, and after making the second loop on the upward movement of the needle-bar the first loop is drawn tight, when the needles close and again pass through the hole Z and make another loop. In each hole, at all four corners, loops w' are formed, one above and one below, the loops forming an elongated hexagon.

What we claim as our invention, and desire to protect by Letters Patent, is—

1. In a sewing-machine for making ornamental and fancy stitching, the combination with the reciprocating needle-bar D, the cross-head D′ affixed thereto, the needle-clamps F F′ sliding to and fro therein, and the needles d d' of the returning-springs f, the cam H pivoted to the cross-head to move the needle-clamps apart, the rod h connecting the cam with a swing-link, the swing-link K, the cranked lever k which transmits movement to the swinging link, the oscillating lever L from which the movement is transmitted by the rod k' to said lever k, the connecting-rod k' and the actuating-cam P, the oscillating shuttle-race carriers which move to and fro simultaneously with the needles and the shuttles M, and means for actuating the shuttles and race-carriers, substantially as described.

2. In a sewing-machine for making fancy or ornamental stitching the combination with a punch and two needles; one needle arranged at each side of the punch, and a reciprocating needle-bar and means for vertically reciprocating the needle-bar of the cross-head D′ affixed to the needle-bar, the clamps sliding therein, the returning-springs f, the cam H pivoted to the cross-head to move the needle-clamps apart, and the swinging link K, connecting-rod h by which the cam H is oscillated, means for oscillating the link K, the shuttle-race carriers N N′ moving simultaneously with the needles to and from each other, so that the shuttle and needles may always retain the same relative positions, two shuttles M placed in the shuttle-race carriers, the pivoted lever L and connecting-rods n n' by which the carriers are simultaneously moved to and from each other, the cam P which actuates the lever L, the crank c and connecting-rod m by which the shuttles are actuated, substantially as described.

In testimony whereof we have signed our names to this specification in the presence of two subscribing witnesses.

ROBERT BROWN.
JOHN QUINN.

Witnesses:
JOHN WOTEMLEY,
PATRICK GAVAN.