No. 628,846.

Patented July 11, 1899.

W. M. PRICE.

NUMBERING PUNCH.

(No Model.)

(Application filed June 8, 1896. Renewed Dec. 20, 1898.)

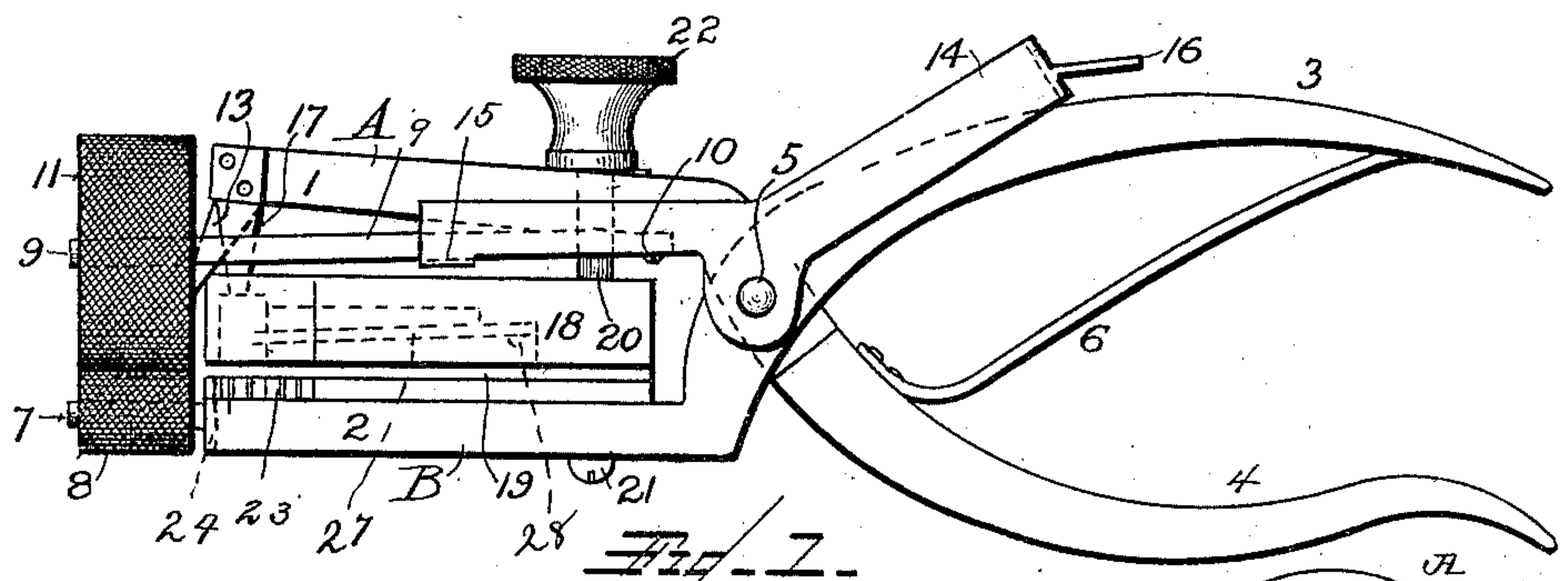

Fig. 1.

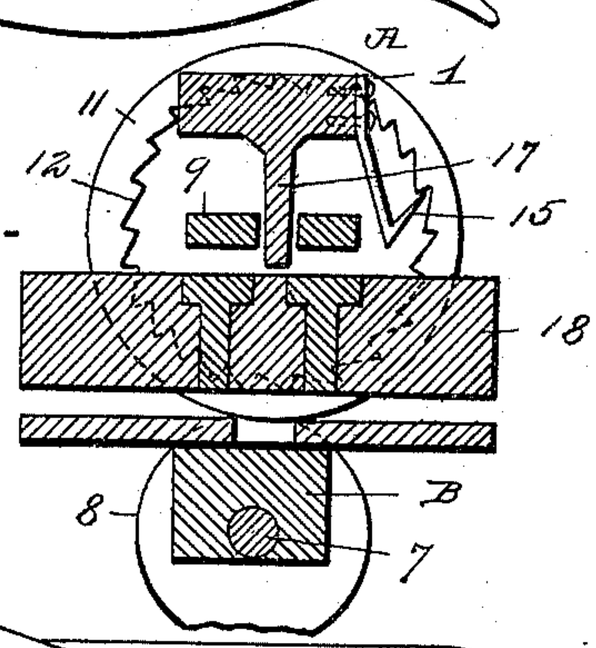

Fig. 4.

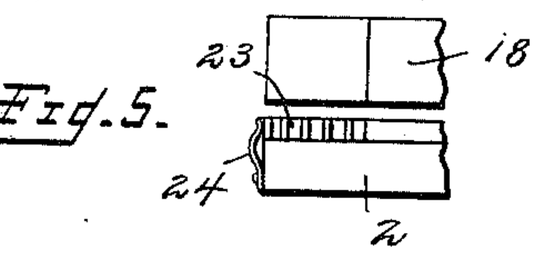

Fig. 5.

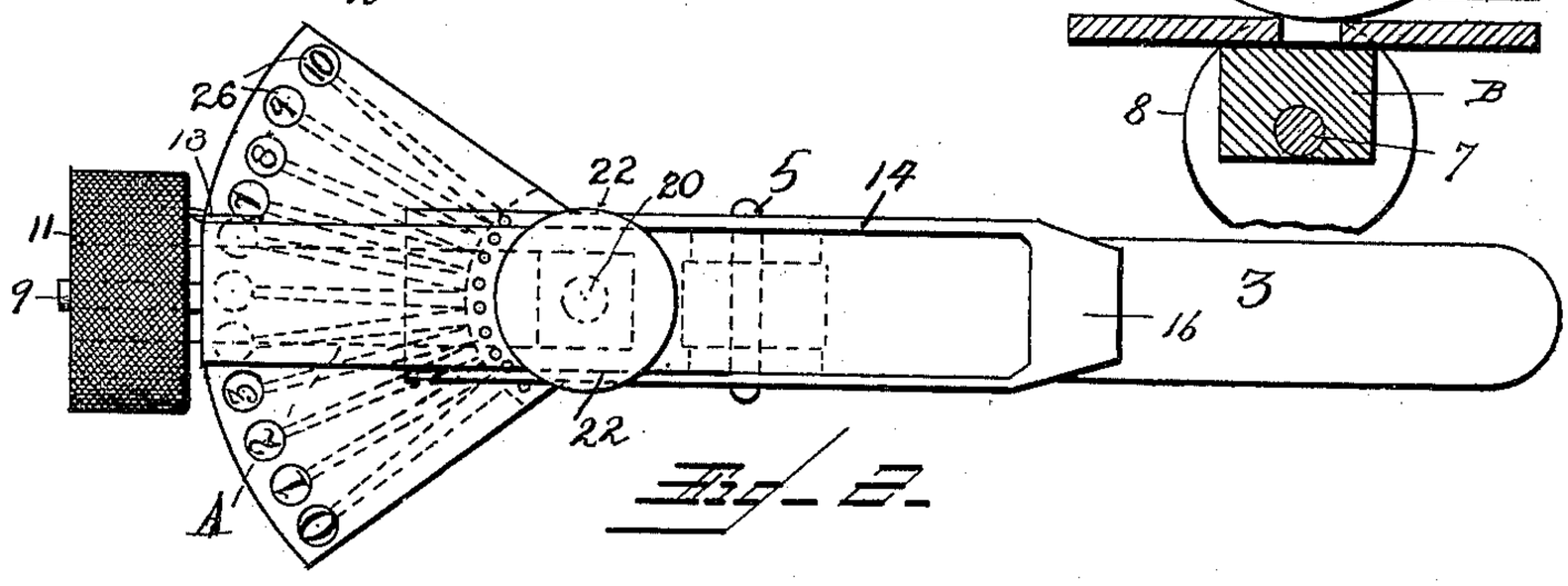

Fig. 2.

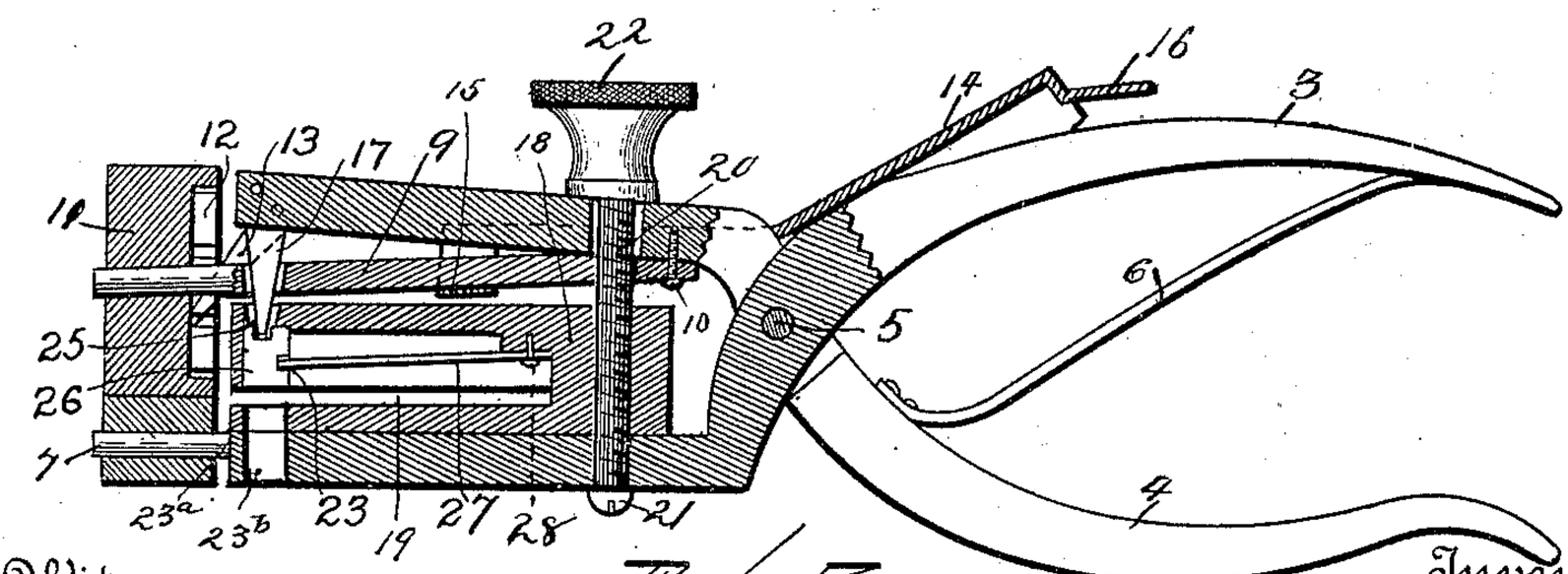

Fig. 3.

Witnesses
Jos. Gregory
K. A. Hau

Inventor,
William M. Price,
by John Wedderburn
Attorney

THE NORRIS PETERS CO., PHOTO-LITHO., WASHINGTON, D. C.

UNITED STATES PATENT OFFICE.

WILLIAM MONTELIUS PRICE, OF PHILADELPHIA, PENNSYLVANIA.

NUMBERING-PUNCH.

SPECIFICATION forming part of Letters Patent No. 628,846, dated July 11, 1899.

Application filed June 8, 1896. Renewed December 20, 1898. Serial No. 699,871. (No model.)

To all whom it may concern:

Be it known that I, WILLIAM MONTELIUS PRICE, a citizen of the United States, residing at Philadelphia, in the county of Philadelphia and State of Pennsylvania, have invented certain new and useful Improvements in Numbering-Punches; and I do hereby declare the following to be a full, clear, and exact description of the invention, such as will enable others skilled in the art to which it appertains to make and use the same.

My invention relates to numbering-punches for checks, drafts, &c.

My object is to provide an improved numbering-punch which will automatically feed the paper.

A further object is to provide a simple, cheap, and compact numbering-punch which will be capable of quick and easy manipulation.

Having these objects in view, the invention consists of those novel features and combinations appearing more fully hereinafter.

In the accompanying drawings, Figure 1 is a side elevation of my improved punch; Fig. 2, a top view, and Fig. 3 a sectional front elevation. Fig. 4 is a cross-section. Fig. 5 is a detail elevation showing the click-spring, &c.

A and B designate operating-levers which are provided with jaws 1 and 2, handles 3 and 4, and are pivoted at 5. The jaws are kept normally separated by a flat spring 6, having one end connected to one handle and the other end pressing against the other handle. The lower jaw is provided with a short spindle 7, on which is journaled a small feed-roller 8.

The numeral 9 designates a spring-spindle which is connected at 10 to the upper jaw, and on the outer end of this spindle is journaled a large feed-roller 11, normally held in contact with the small roller by the spring-spindle. The inner face of the large roller is provided with a series of notches 12, and a spring-pawl 13, connected to the end of the upper jaw, is adapted to project into the notches, whereby when the handles are grasped and the jaws forced together the pawl rides idly over the notches. When the jaws move back, the pawl turns the large feed-roller and feeds forward any paper that may be between the rollers.

I provide a lifting-lever 14, which is pivoted on pivot 5, and this lifting-lever has a cross-piece 15, which lies immediately under spring-spindle 9, said lifting-lever being also provided with a thumb-button 16, and when this button is depressed the spring-spindle 9 is lifted, so that the paper can be slid in between or removed from the rollers. The spring-spindle 9 is also provided with a vertical aperture through which a punch-pin 17, connected to the upper jaw, is adapted to loosely pass when the jaws are operated.

The numeral 18 designates a sector-shaped die block or holder, and this block is slotted at 19 for the reception of the paper. A screw-threaded pivot-pin 20 is connected to this block, and this pin passes through the jaws, being provided with a head 21, and on the upper end of said pin is located an adjusting thumb-nut 22. The pin passes loosely through the upper jaw, so that the jaws are free for relative movement. The lower portion of the die-block has a series of notches 23, a female die 23^a, while the lower jaw B has an aperture 23^b, through which the clippings pass. 24 designates a click-spring connected to the lower jaw and which rides on and is adapted to engage with the notches and hold the die-block at any desired position after adjustment. The under face of that portion of the die-block which lies above slot 19 is provided with a series of circular pockets, and there is a small pin-hole 25, which leads from each pocket to the upper face of the block, said pin-holes being adapted to receive the punch-pin when brought into alinement therewith.

I provide a series of circular dies 26, which are received in the pockets, the dies bearing the punching numbers or characters on their lower faces and corresponding other numbers on the upper face of the die-block, so that the operator can determine at a glance how to move the die-block to get the desired die in punching position. The dies are carried on the free ends of respective flat springs 27, which are connected to the die-block at 28.

The operation is as follows: The lifting-lever is first manipulated and the rollers separated, so that the paper to be punched can be inserted between them and into the slot in the die-block. The lever is then released. The die-block is next moved until the proper

die is immediately under the punch-pin. The block is held in position by the click-spring. The jaws are now brought together, thereby causing the punch-pin to press the die through the paper and against the female die, while the clippings pass through the aperture. Upon releasing the grasp as the parts return to normal position the pawl engages with the notches in the large feed-roller and feeds the paper in position for the next cut.

Having thus described the invention, what is claimed as new is—

1. In a numbering-punch, the combination with relatively-movable jaws, of independent dies carried by one of the jaws, operating mechanism therefor carried by the other jaw, a feed-roller carried by one of the jaws, a spring-pressed feed-roller carried by the other jaw and adapted for engagement with the first-named feed-roller, and means adapted to withdraw the spring-pressed roller from contact with the first-named feed-roller, substantially as described.

2. In a numbering-punch, the combination with relatively-movable jaws, of dies carried by one of the jaws, operating mechanism for said dies which is actuated by the movement of the jaws, a feed-roller journaled to one of the jaws, a spring-spindle having one portion connected to the other jaw, a feed-roller journaled on said spindle, and a pivoted lifting-lever adapted for engagement with the spring-spindle, whereby the feed-roller carried by the latter may move.

3. In a numbering-punch the combination with relatively-movable jaws, of dies carried by one jaw, operating mechanism therefor carried by the other jaw, a feed-roller carried by one jaw, a spring-pressed feed-roller carried by the other jaw and in engagement with the first-named roller, mechanism for rotating said roller when the jaws are moved, and mechanism for moving said roller out of engagement with the first-named roller, substantially as described.

In testimony whereof I have signed this specification in the presence of two subscribing witnesses.

WILLIAM MONTELIUS PRICE.

Witnesses:

ABBIE A. MONTELIUS,

S. S. PRICE.