No. 622,546.

Patented Apr. 4, 1899.

T. SHAW.

PRESSURE DOOR.

(Application filed Dec. 16, 1898.)

(No Model.)

Fig. 1.

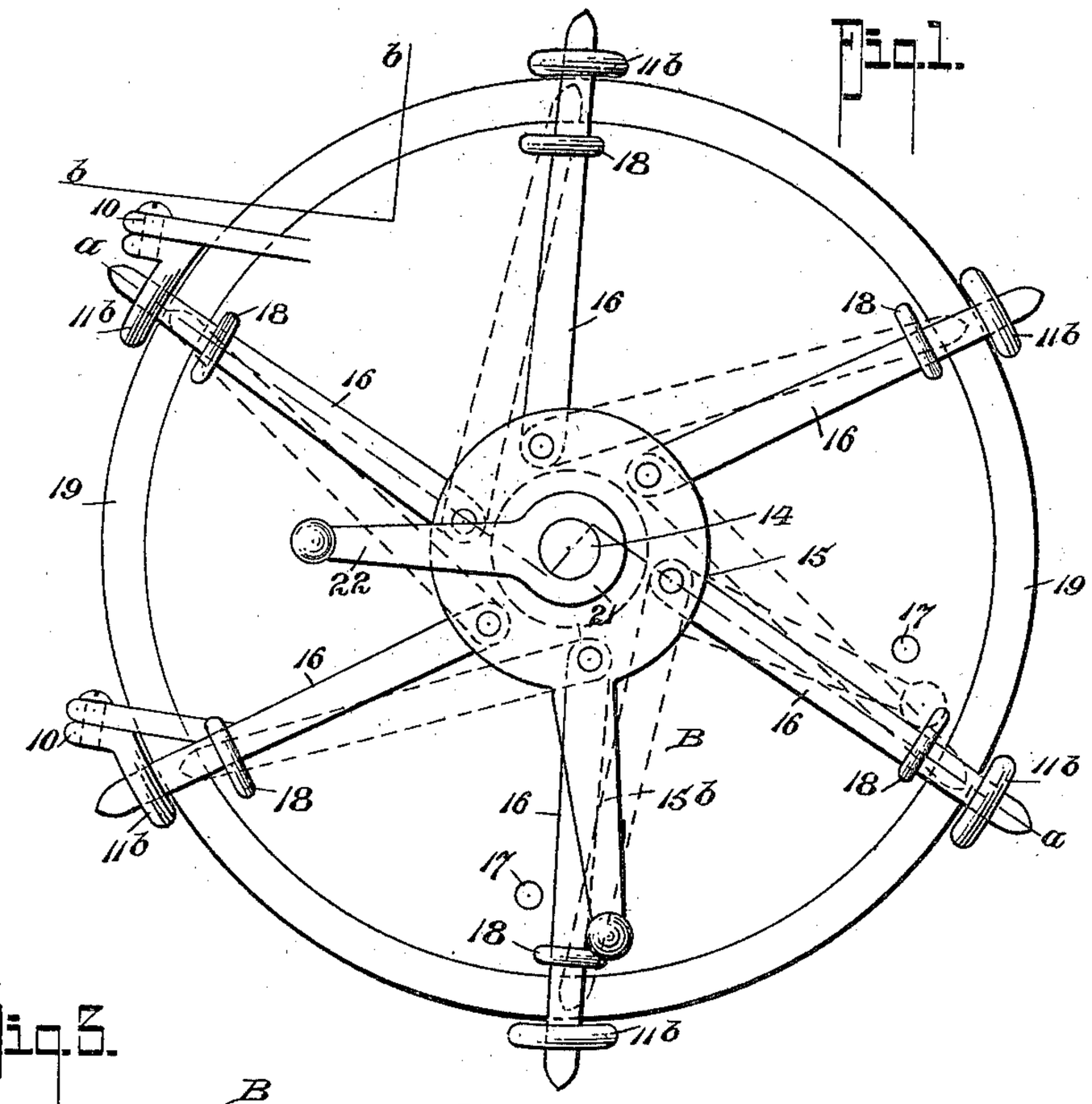

Fig. 6.

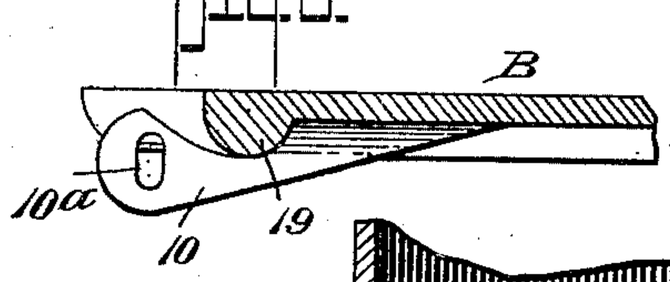

Fig. 2.

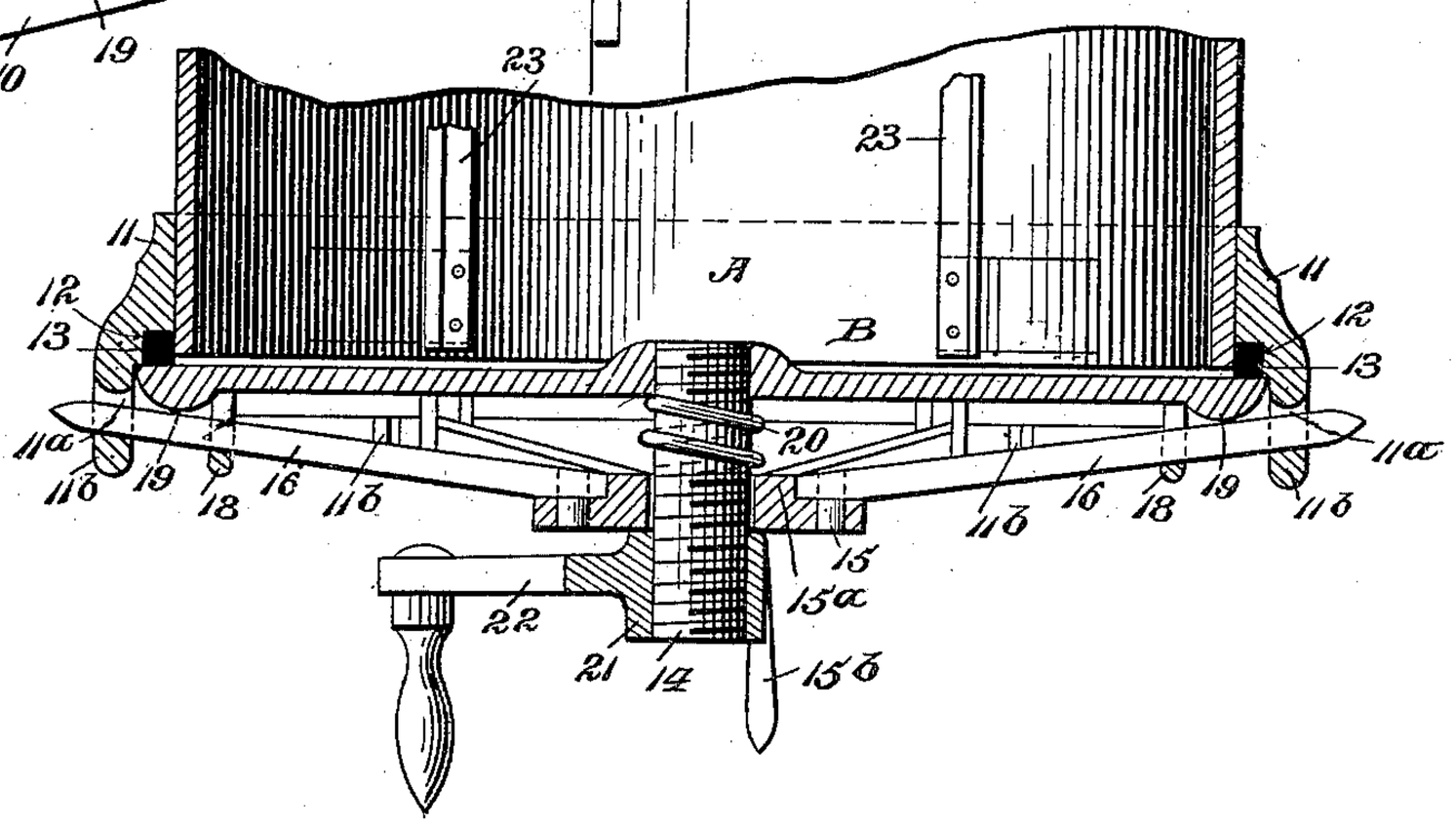

WITNESSES:
A. E. Dieterich.
H. G. Dieterich

INVENTOR
Thomas Shaw

BY
Fred G. Dieterich
ASSOCIATE ATTORNEY.

THE NORRIS PETERS CO., PHOTO-LITHO., WASHINGTON, D. C.

UNITED STATES PATENT OFFICE.

THOMAS SHAW, OF VICTORIA, CANADA.

PRESSURE-DOOR.

SPECIFICATION forming part of Letters Patent No. 622,546, dated April 4, 1899.

Application filed December 16, 1898. Serial No. 699,521. (No model.)

To all whom it may concern:

Be it known that I, THOMAS SHAW, a subject of the Queen of Great Britain, residing at Victoria, in the Province of British Columbia, Canada, have invented a new and useful Pressure-Door, of which the following is a specification.

My invention relates to improvements in doors for closing apertures that are subjected to extreme pressure and to make such openings steam or water tight in a very substantial and effective manner; and the object of this invention is to provide a means of effecting a closure for steam-boxes or bulkheads or for any other purpose where the pressure to be resisted is very great in a comparatively short space of time and at a minimum of cost. I attain this object by the mechanism illustrated in the accompanying drawings, in which—

Figure 1 is a front elevation of my door or closure. Fig. 2 is a section of the same on the line *a a* in Fig. 1; and Fig. 3 is a detail of one of the hinges of my door, taken on the line *b b* in Fig. 1.

Similar numerals and letters refer to similar parts throughout the several views.

As illustrated in the appended drawings, my door is designed to close a cylindrical opening; but it is obvious that this device may be applied to apertures of various forms. In this case it is applied to the mouth of a cylindrical steam box or retort.

In describing the various parts, A indicates the vessel or opening to be closed, and B is the door or closure. These parts do not constitute my invention; but the mechanism by which they are secured together illustrates the device on which I base my claims. The said door B is hung on the hinges 10. The fixed portions of these are secured to a band 11 or otherwise secured to the mouth of the opening. Arranged around the mouth of the opening and seated in a groove 12 is a rubber packing 13, which forms a seat for the door B. Securely fixed to the center of the door B is a stud 14, which is threaded on its projecting end. Passed over the stud 14 and arranged to move thereon is a disk 15, having a boss 15^a on its inner side. Pivoted eccentrically to the under or inner side of the disk 15 and with their inner ends abutting against the boss 15^a are radial arms or bolts 16, consisting of bars and projecting beyond the outer rim of the door B, and when these bolts are thrown out, as will be understood presently, their ends will pass through apertures 11^a in projecting lugs 11^b, which lugs are integral with the band 11 on the rim or edge of the aperture. These bolts 16 are arranged tangentially to the circumference of the disk 15, so that as the disk is turned or rocked back and forth the said bolts are susceptible of being withdrawn or removed from the apertures 11^a in the lugs 11^b. The disk 15 is provided with a crank and handle 15^b for turning it back and forth. As shown by dotted lines, (see Fig. 1,) when the crank is moved within the segment of the stops 17 the outer ends of the bolts will be passed through the apertures in the lugs 11^b. To prevent the bolts from moving from their proper positions when withdrawn from the lugs, I provide staples or clasps 18, which are rigidly fixed to the door and act as keepers for the bolts to work therein. Around the outer side of the door B is a raised rim or bead 19, on which the bolts 16 fulcrum, and the opposite ends of the said bolts lie on the inner side of the disk 15. (See Fig. 2.)

Encircling the stud 14 and lying between the door B and the boss 15^a on the disk is a spiral spring 20, and on the opposite side of said disk is a nut 21, which is turned on the threaded portion of the stud by a crank 22.

From the foregoing it is shown that the disk 15 is controlled in its position on the stud 14 by the spring 20 on one side and the nut 21 on the other, and consequently as bolts have their inner ends pivoted to the disk and their outer ends fulcrumed over the rim 19 and as the disk 15 forces the inner ends toward the door it is clear that a powerful leverage is exerted on the door, it being firmly held on its seat, and thus forms an air-tight or steam-tight joint.

The bolts 16 when forced down by the nut 21 take the place of and become levers, and the power exerted is in proportion to the distances between the point of fulcrum, the lugs 11^b, and the pivot on the disk, and the pressure exerted by the nut 21. It is clear, therefore, that even the ends of steam-cylinders may be successfully closed with this device,

it being merely necessary to construct the parts sufficiently powerful to stand the strain that will be exercised.

To provide for the door being properly forced up to its seat at the side occupied by the hinges, the hinge-pin holes are slotted in the direction of the thrust of the door, as 10^a. (See Fig. 3.) This allows the door to move to and from its seat the required distance without unnecessary strain.

Should this door be employed to close steam boxes or retorts, I provide rails, as 23, for the carriages to be moved in and out, which carries the matters to be cooked, this of course being no part of my invention.

In the operation of my improved door the crank 15^b is turned to the position as shown in dotted lines and the door is closed. The crank is then returned to its depending position, which drives the points of the bolts 16 into the apertures in the lugs 11^b. The nut 21 is then turned until sufficient strain is exercised on the bolt-levers 16 to rigidly secure the door against movement from the pressure exerted against the opposite side. When the nut 21 is relaxed, the spring 20 will carry out the disk, so that the outer ends of the bolts will be released from pressing contact between the rim 19 and the lugs 11^b. They may then be withdrawn by the movement of the crank 15^b.

Having now described my invention, what I claim is—

1. A device of the class described, comprising a seat having a series of lugs, a door arranged on said seat, a threaded stud mounted on said door, a rotary plate or disk arranged on said stud, a series of tangentially-arranged bolts consisting of bars having their inner ends eccentrically connected to said disk or plate and adapted to slide inward and outward when the same is rotated, said bars being fulcrumed near their outer ends on the door and having their outer ends detachably engaging the lugs and a nut arranged on the threaded stud and engaging the disk or plate, whereby the inner ends of the bars are forced inward toward the door, substantially as described.

2. A door hinged or otherwise supported on a suitable seat around an opening, lugs projecting outward at intervals round in proximity to said door, apertures or recesses in said lugs, in combination with a rim or bead around the outer edge of said door, a threaded stud fixed to the center of the door, a stem or disk made to move on the stud, and bolts connecting therewith at a tangent to its circumference, means for turning said disk, so that said bolts will be thrust through the openings in the said lugs, staples or keepers for holding the arms in place, a spring interposed between the disk and the door, and a nut on the outer end of the stud, whereby the disk, and consequently, the inner ends of the bolts will be moved in or out in the direction of the thrust of the door, as specified.

3. A door having a raised rim or bead around its outer edge, a stud secured to its center having a disk to move thereon, a crank-handle secured to said disk, radial bolts pivoted to the rim of the disk, said bolts projecting beyond the edge of said door when the disk is turned, so that they are approximately in line with the axis thereof, but when the disk is turned back their outer ends will be withdrawn and their alinement will be tangent to the circumference of the disk, means for moving the disk in or outward upon the stud, whereby when the bolts are projected forward they will be engaged by lugs or fixtures on the walls of the opening to be closed, and by moving the disk inward on the stud the door will be held down by the bolts, acting as levers, substantially as specified.

THOMAS SHAW.

Witnesses:
W. G. TRETHEWEY,
H. B. W. AIKMAN.