(No Model.)

L. S. POWERS.

BICYCLE.

No. 581,767. Patented May 4, 1897.

FIG. 1.

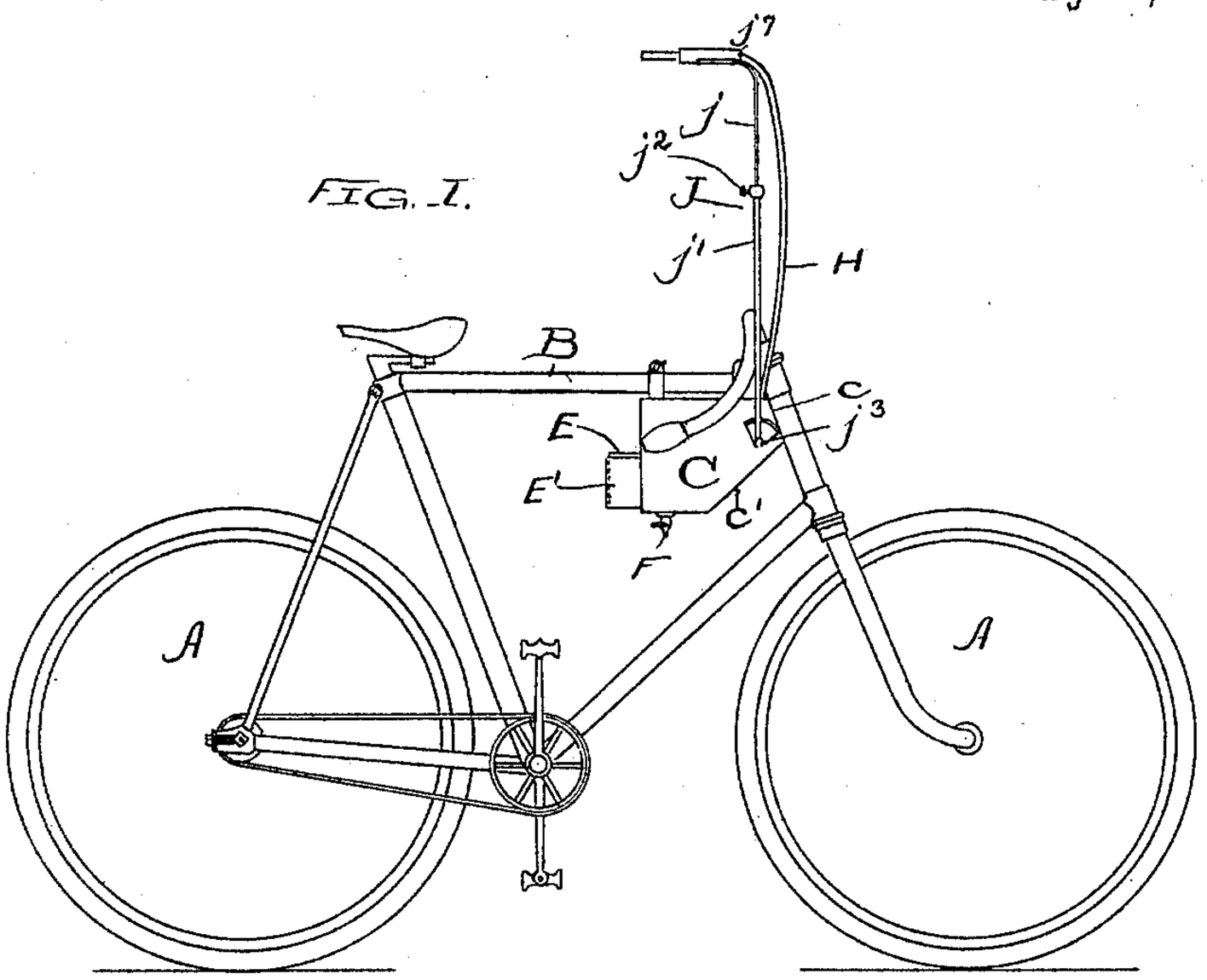

FIG. 2.

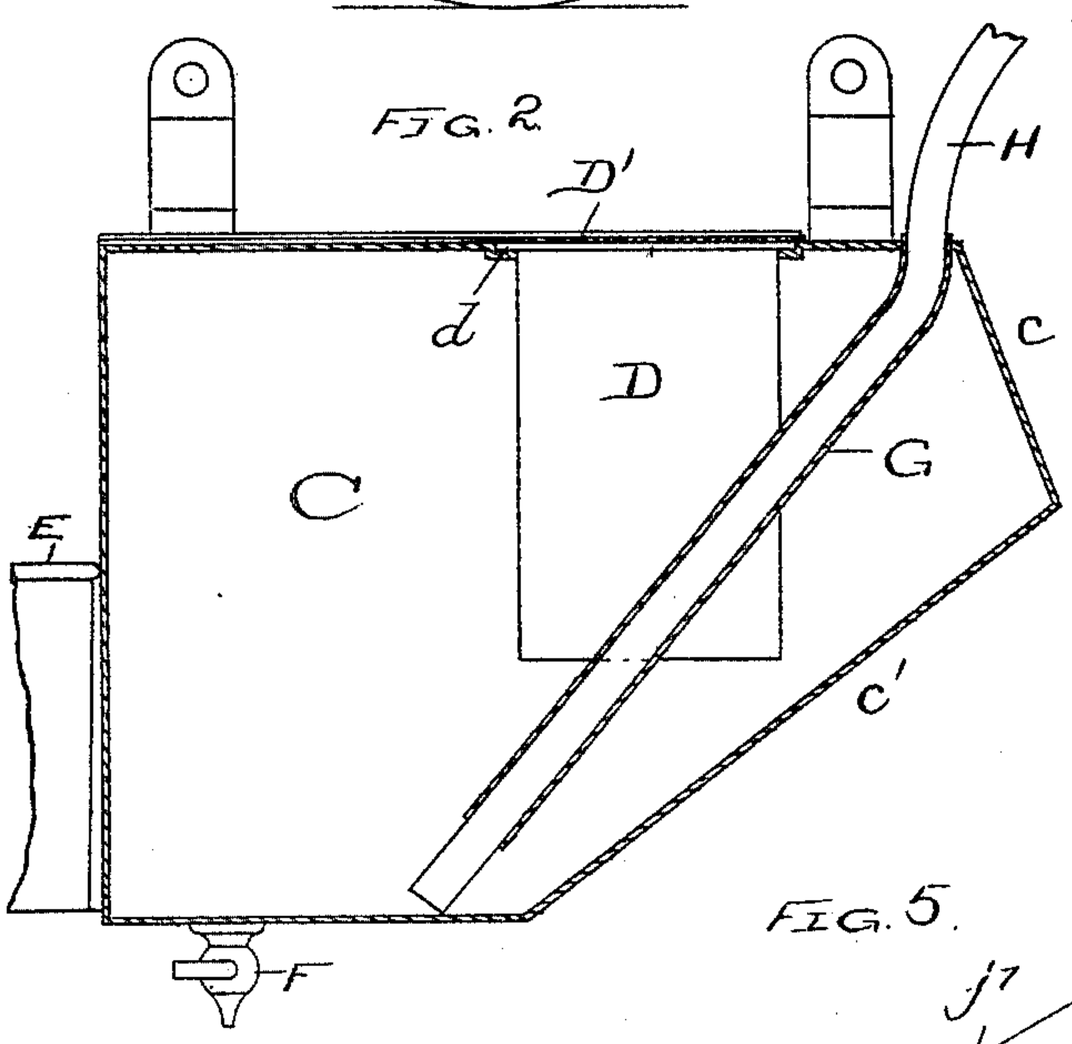

FIG. 3.

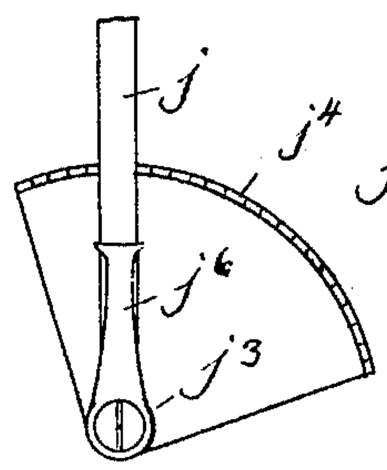

FIG. 4.

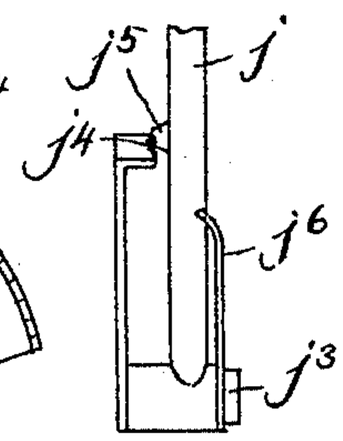

FIG. 5.

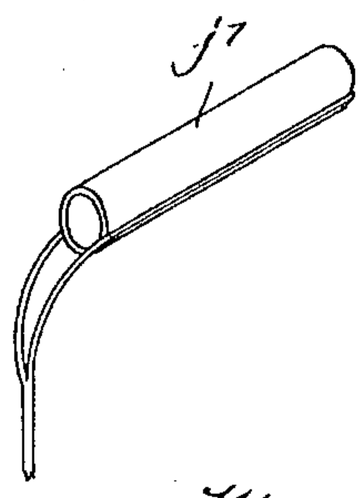

WITNESSES:
Sew. C. Curtis
H. M. Munday.

INVENTOR:
LEROY S. POWERS.
BY Munday, Evarts & Adcock
HIS ATTORNEYS.

THE NORRIS PETERS CO., PHOTO-LITHO., WASHINGTON, D. C.

UNITED STATES PATENT OFFICE.

LEROY S. POWERS, OF CHICAGO, ILLINOIS.

BICYCLE.

SPECIFICATION forming part of Letters Patent No. 581,767, dated May 4, 1897.

Application filed October 3, 1895. Serial No. 564,498. (No model.)

To all whom it may concern:

Be it known that I, LEROY S. POWERS, a citizen of the United States, residing in Chicago, in the county of Cook and State of Illinois, have invented a new and useful Improvement in Bicycles, of which the following is a specification.

This invention relates to an improvement in bicycles, which consists in providing the bicycle with a water-tank and drinking apparatus for the rider's use and which may be used by the rider without dismounting and while under way. This apparatus is of special advantage in the military use of the bicycle, as it enables the mounted soldier to carry his drinking-water easily and to drink without dismounting or breaking ranks, and this, too, even when one or both hands are engaged. It is especially useful also for relay-riders, who travel long distances at a high speed and who do not want to waste any time in stopping to drink, and its advantage to race-riders, especially upon dusty roads and in hot weather, will be apparent.

In the accompanying drawings, which form a part of this specification, and in which similar letters of reference indicate like parts, Figure 1 is a side elevation of a bicycle provided with my drinking apparatus. Fig. 2 is an enlarged sectional view of the water vessel. Figs. 3 and 4 are a side and end view of one of the details of construction—the joint and detent of the tube-standard; and Fig. 5 is a detail view of the upper end of the tube-standard, showing the tube-holder.

In said drawings, A is the bicycle, and B is the upper member of the bicycle-frame.

C is the water-containing vessel, made, preferably, of sheet metal in the form of a narrow box, the front end being shaped as at c to fit against the front standard of the bicycle and shaped as at c' to conform to the outline of the frame.

D is a small ice-chamber suspended in the water vessel by means of a flange d at its upper edge and provided with a cover D'. Through the aperture in which the ice-chamber sets access may be had to the interior of the water vessel for cleaning, filling, &c. At the rear end of the water vessel a socket E' is provided in which to place or suspend a removable drinking-cup E. In the bottom of the water vessel is a stop-cock F to draw off the water into the drinking-cup, if desired. This will prove a convenience when the rider desires to give water to another than himself.

From the top of the water vessel at some convenient point, and preferably from the front end, a metal tube G extends down toward the bottom of the vessel to receive the end of a flexible drinking-hose H. A standard J, made in two parts—a rod j and a tube j'—which telescope together for purposes of adjusting the standard to different heights and having a set-screw j^2 for the purpose of fixing the standard at the required height, is pivotally attached to the water vessel at the pivot j^3, and a notched quadrant j^4 and a detent j^5, in conjunction with the spring j^6, afford a construction such that the standard carrying the drinking-hose may readily and quickly be swung up into the position shown in Fig. 1 when wanted or swung forward and downward out of the way of the rider when not wanted. The upper end of the standard-rod j is bent and provided with the horizontal tubular hose-holder j^7, through which the rod of the drinking-hose may be threaded and held by friction in a suitable position to be taken in his mouth by the rider.

The weight of this apparatus, aside from the water which it contains, is quite inconsiderable, and although the weight of the water would seem at first glance to be a considerable matter, something like two pounds for a quart, there is really very little increased weight from this circumstance, because the weight of the rider is increased by the weight of the water if he drinks it before he starts or on the way, and if he has a constant supply to sip from at intervals he is less likely to drink at any one time a large quantity, and thus increase his own weight temporarily, and, as he is constantly losing weight by perspiration, the weight of the water carried in the vessel at the start of the journey and constantly diminishing in the vessel as the journey increases is practically, upon the average, no disadvantage, while on the other hand the saving in time, in physical comfort, and in physical power is a decided advantage and gain.

I claim—

1. The combination with a bicycle of a wa-

ter-carrying vessel attached to the frame thereof, and means for drinking from said vessel without dismounting, said means consisting of a flexible hose carried on a standard pivotally attached at its lower end, substantially as specified.

2. The combination with a bicycle of a water-carrying vessel attached to the frame thereof, and means for drinking from said vessel without dismounting, said means consisting of a flexible hose carried on a standard pivotally attached at its lower end, and provided with a detent for holding it in position, substantially as specified.

3. The combination with a bicycle of a water-carrying vessel attached to the frame thereof, and means for drinking from said vessel without dismounting, said means consisting of a flexible hose carried on a standard, said standard being provided at its upper end with a horizontally-extending holder for holding the hose in position to be easily reached by the rider's lips, substantially as specified.

LEROY S. POWERS.

Witnesses:
H. M. MUNDAY,
S. E. CURTIS.