(No Model.)

F. A. REICHARDT.

TOOL AND TOOL HANDLE.

No. 574,043. Patented Dec. 29, 1896.

Fig. 1.

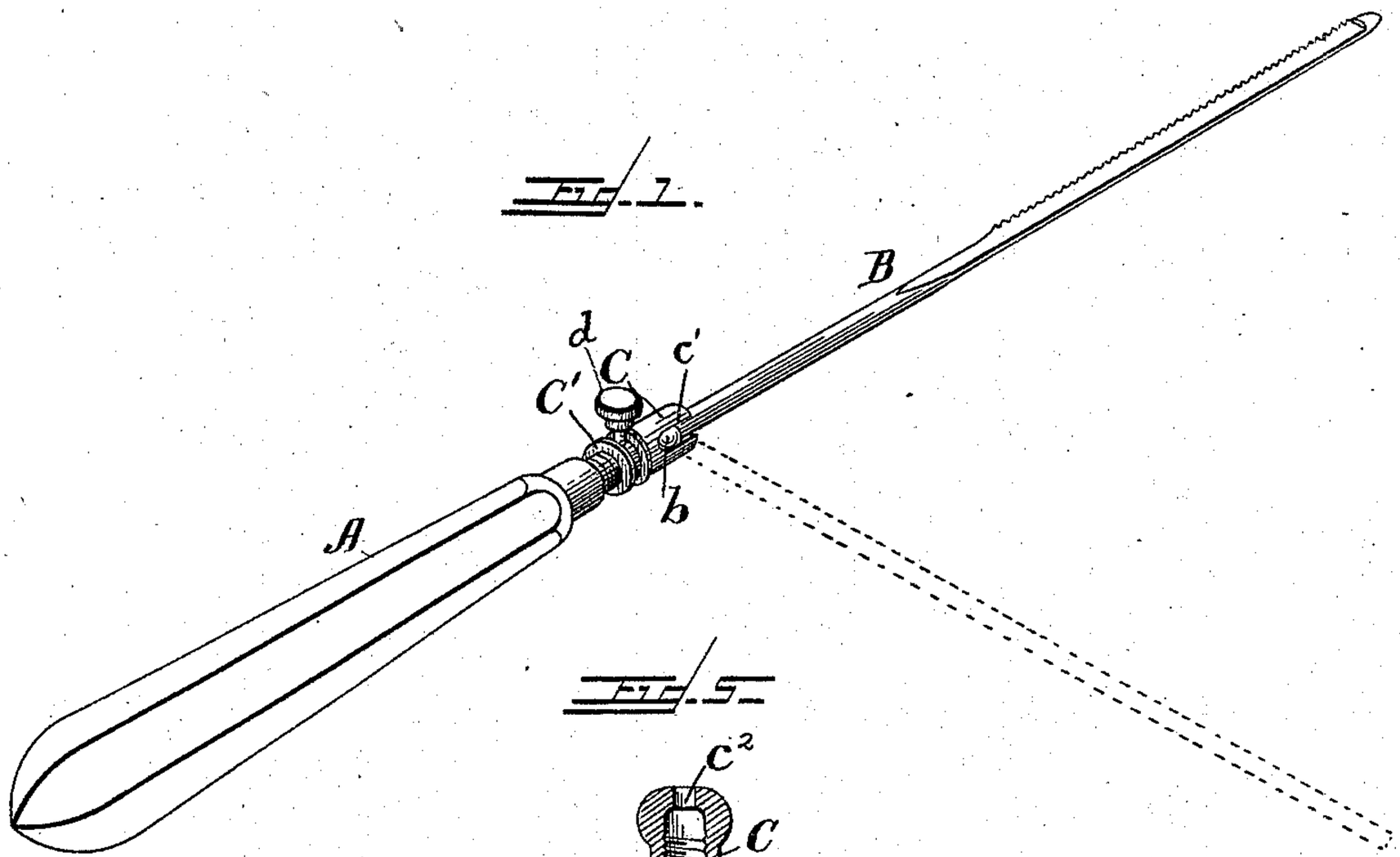

Fig. 5.

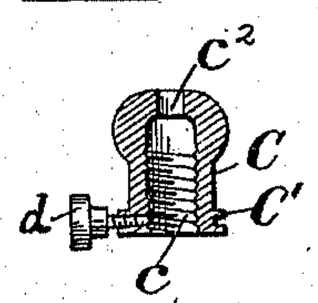

Fig. 2.

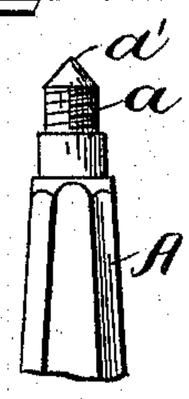

Fig. 6.

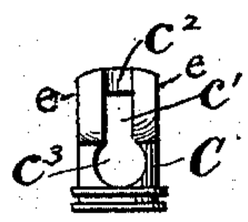

Fig. 4.

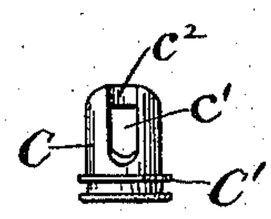

Fig. 3.

WITNESSES

A. B. Driggs
C. J. Gooch

INVENTOR

F. Alfred Reichardt
By A. M. Smith & Son,
Attorneys.

THE NORRIS PETERS CO., PHOTO-LITHO., WASHINGTON, D. C.

UNITED STATES PATENT OFFICE.

FERDINAND ALFRED REICHARDT, OF NEW YORK, N. Y.

TOOL AND TOOL-HANDLE.

SPECIFICATION forming part of Letters Patent No. 574,043, dated December 29, 1896.

Application filed April 15, 1896. Serial No. 587,671. (No model.)

To all whom it may concern:

Be it known that I, FERDINAND ALFRED REICHARDT, a citizen of the United States, and a resident of New York, county of New York, and State of New York, have invented a new and useful Improvement in Tools and Tool-Handles, of which the following is a full, clear, and exact description, reference being had to the accompanying drawings, making part of this specification.

The invention relates to that class of tools or instruments in which the bit or blade is made removable from the handle for permitting the use of the latter in connection with a variety of bits or implements, and more particularly to the means for effecting the union of the handle and bit or implement members and for permitting their relative adjustment for facilitating their use.

It consists in the combination, in an implement, of a handle member and a bit or tool member having a ball-and-socket or universal joint connection and means for tightening said connection, whereby the bit or blade can be held at any desired angle of relation to the handle for facilitating its use; in a novel construction of the coupling-piece or head connecting the bit or blade and handle, and in certain other details of construction, all as hereinafter described and claimed.

In the accompanying drawings, Figure 1 is a perspective view of a tool embodying my invention. Fig. 2 is a side elevation of one end of the handle; Fig. 3, a similar view of the shank end of the bit; Fig. 4, a side elevation of the coupling-piece. Fig. 5 represents a section through said coupling, and Fig. 6 shows a modification in the form of the slot in the coupling-piece.

A indicates the handle, made of wood or other suitable material and provided at one end with a screw-threaded projection *a*, terminating in a sharply-pointed end of steel or other hard metal. When the handle is made of suitable metal, the screw-threaded and pointed end may be formed integral therewith, but when the handle is made from wood or soft metal the screw-threaded point will be made separate therefrom and rigidly connected with the handle in any suitable manner, it being essential that the point shall be of hard metal, for a purpose which will appear.

B indicates a bit, or rather a blade, that shown being in the form of a compass-saw, provided on the end of its shank portion with a ball or bulb *b*, of brass or other soft metal, adapting it to be indented by the point *a'*.

C indicates a metallic head or coupling-piece, perforated longitudinally to receive the bit or tool shank and provided at one end with an internal screw-thread matching the thread *a*. This head outside of or beyond the screw-threaded portion is slotted on one side at *c'*, the slot extending to the outer end and radially to the central longitudinal perforation or bore which receives the bit or tool B. The central bore outside of the screw-threaded end is contracted in diameter, forming an annular shoulder, concave or otherwise, at c^2, against which the ball *b* is thrust by the action of the screw *a* until the sharp point *a'* indents the ball and holds it, together with the bit or tool, the latter at any desired angle to the handle at which it may be set.

When the bit or tool to be used is a small one, such as that shown, it can be passed, point first, through the perforated head C until the ball rests against the shoulder c^2, after which the handle is screwed into the head for securing the bit in place, as described, but in constructions in which the bit, blade, or implement is too large to pass through the head the slot *c* below the shoulder c^2 may be enlarged, as shown at c^3 in Fig. 6, to allow the shank end of the bit and the ball thereon to pass laterally through the slot into the central bit-socket.

The ball may be applied to a great variety of bits or implements, to any one of which the handle can be readily applied, thereby adapting the latter to be used for various purposes.

It will be understood that the ball or bulb *b* must be of relatively soft metal, as compared with the point *a'*, for adapting the latter to indent the ball and thereby to hold it at any desired adjustment, as by this construction the bit or tool to which the ball is applied can be set and held at any desired angle to the handle, the slot in the head or coupling-piece, in connection with the ball-and-socket joint, permitting the adjustment of the angle, thus facilitating the use of the tool in places to which it would not otherwise be adapted.

The head or coupling-piece is provided on

its screw-threaded end with a milled collar C′, facilitating its adjustment, but where the bit is to be set at an angle to the handle, as explained, such bit can be used as a lever for holding the coupling-piece or for screwing it on or off the handle.

Sometimes when the bit is set at an angle to the handle, as indicated by dotted lines, Fig. 1, it acts, under pressure on the handle, to back the handle-screw and thus loosen the bit. To prevent this, a set-screw may be employed, as indicated at *d*, Figs. 1 and 5, said screw engaging the handle-screw and preventing its backing until released by backing the set-screw.

The head or outer end of the coupling-piece may be made polygonal in form or flattened upon opposite sides, as shown at *e e*, Fig. 6, to adapt it to the use of a wrench for holding or turning it relatively to the handle when required.

Having thus described the invention, what is claimed as new, and sought to be secured by Letters Patent, is—

1. A tool-handle having a screw-threaded and pointed end and an internally-screw-threaded coupling-piece or sleeve provided with a bit-socket and made adjustable on said pointed end for engaging a bit therewith, substantially as described.

2. The combination with a tool-handle provided with a screw-threaded and pointed, metallic end, of the longitudinally-perforated, removable head or coupling-piece engaging said end, said head having an open, lateral slot communicating with the central perforation, substantially as and for the purpose set forth.

3. The combination in a tool or implement of a handle having a screw-threaded and pointed end, a slotted and longitudinally-perforated head or coupling-piece engaging said screw-threaded end, and a bit or tool having a ball or bulb on the end of its shank for engaging said coupling-piece, substantially as described.

4. The combination with a tool-handle having a screw-threaded and pointed end of hard metal, of a bit or implement provided on its shank end with a ball or bulb of soft metal, and a coupling-piece or sleeve adjustable on said pointed end for the purpose and substantially as described.

5. The combination of the screw-threaded and pointed handle, the slotted head or coupling-piece, provided with the central bore and socket for the ball-ended bit and an enlargement of the slot below the ball-socket for permitting the passage of the ball, substantially as described.

6. The herein-described tool, comprising a handle member having a pointed end, a bit member having a ball on the end of its shank, and a coupling-piece or sleeve having a socket for said ball and made adjustable on said pointed end for forcing the latter into engagement with said ball, substantially as described.

7. The herein-described tool or implement, comprising a handle member having a screw-threaded and pointed end, a slotted coupling-piece for connecting a bit member with said screw-threaded end, and a set-screw for holding the handle and bit members at the required relative adjustment, substantially as described.

In testimony whereof I have hereunto set my hand this 14th day of April, A. D. 1896.

F. ALFRED REICHARDT.

Witnesses:
M. E. KIERNAN,
H. HAYWOOD.