No Model.)

J. F. DYE.

COMBINED THILL SUPPORT AND ANTIRATTLER.

No. 553,057. Patented Jan. 14, 1896.

FIG. 1.

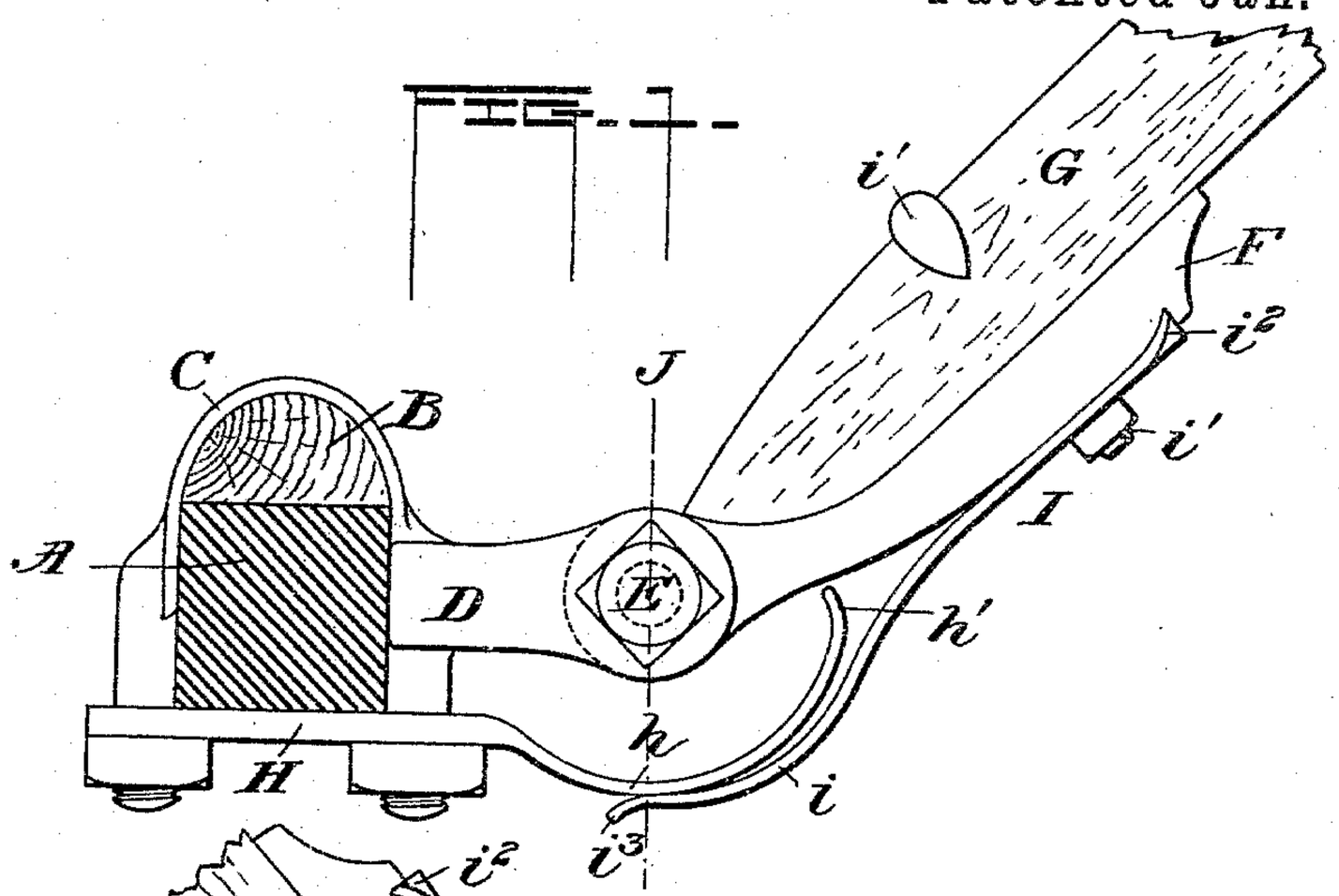

FIG. 2.

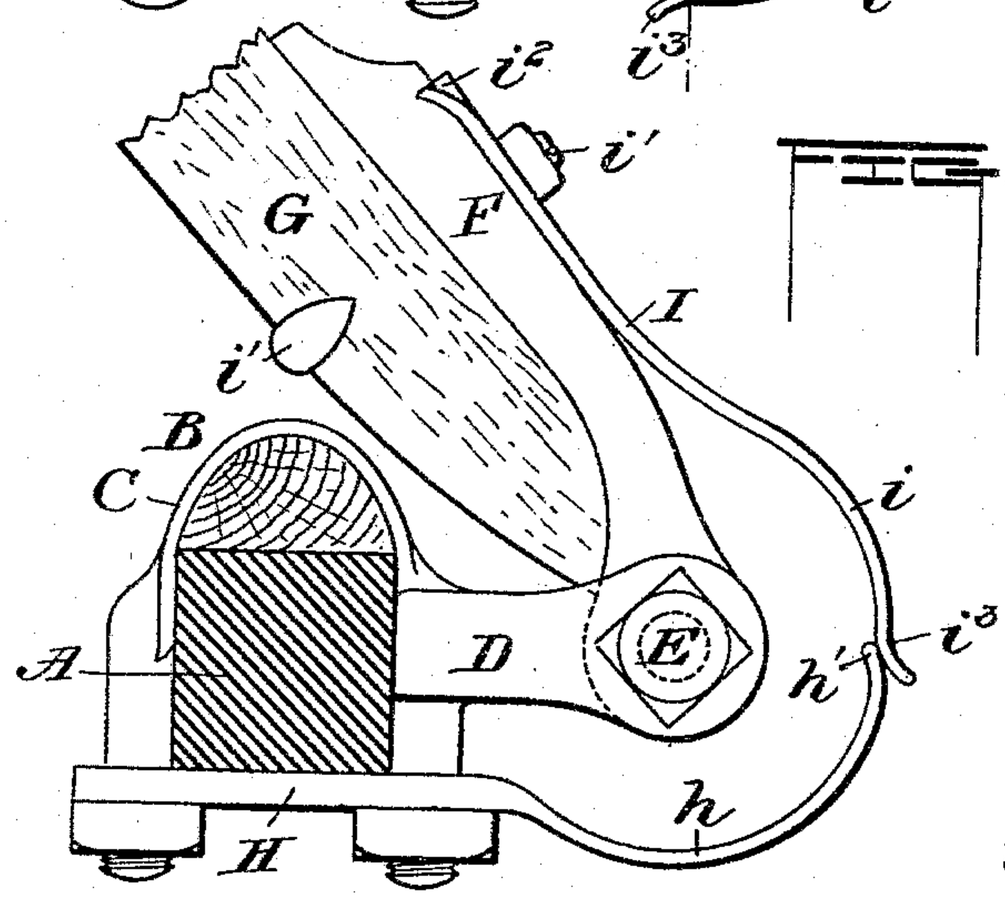

FIG. 3.

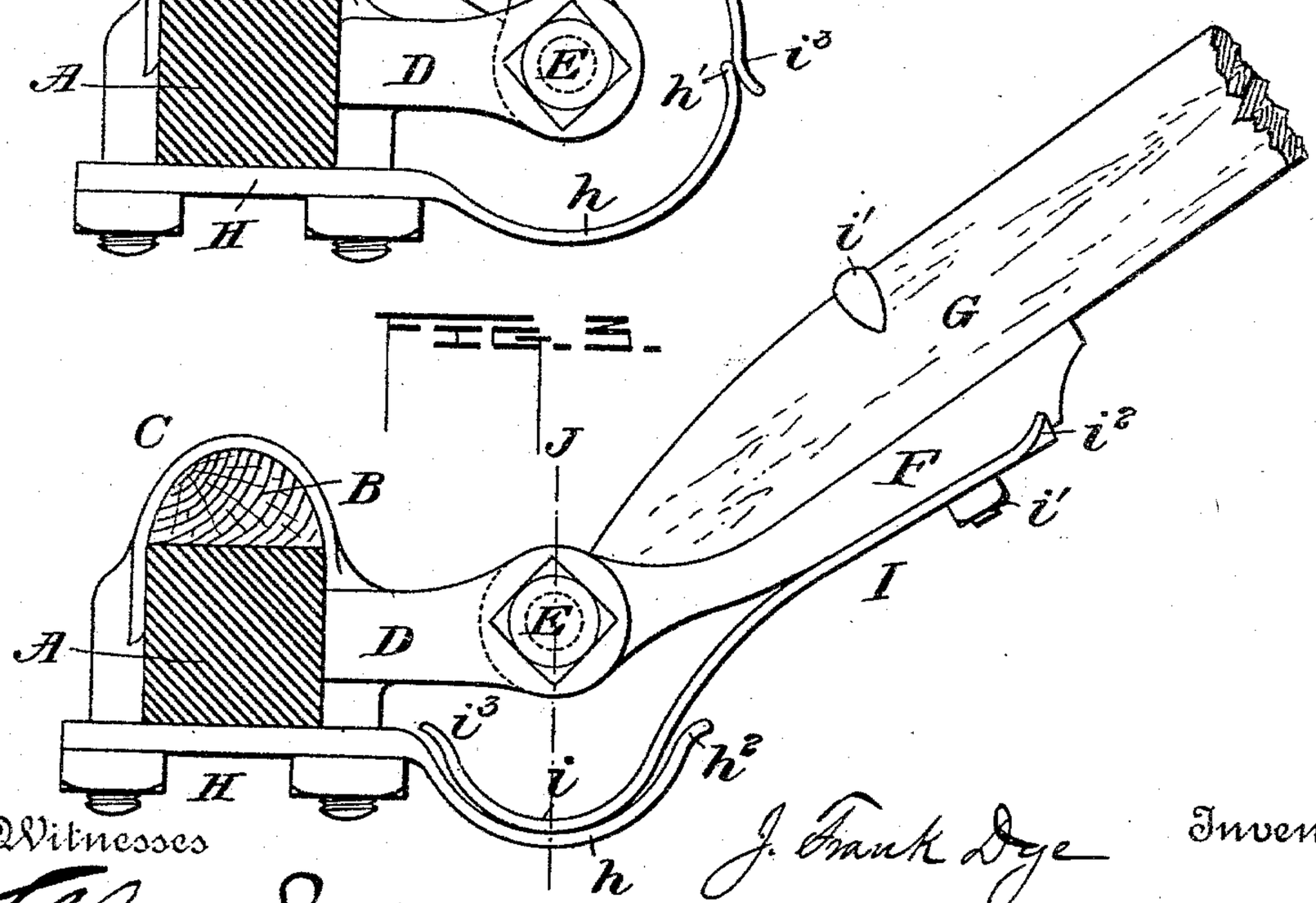

Witnesses

T. A. Romer Jr.

Chas. E. Riordon

J. Frank Dye Inventor

by Butterworth & Dowell Attorney

ANDREW B. GRAHAM, PHOTO-LITHO. WASHINGTON, D.C.

UNITED STATES PATENT OFFICE.

JOHN FRANK DYE, OF NEWPORT, KENTUCKY.

COMBINED THILL-SUPPORT AND ANTIRATTLER.

SPECIFICATION forming part of Letters Patent No. 553,057, dated January 14, 1896.

Application filed November 10, 1894. Serial No. 528,394. (No model.)

To all whom it may concern:

Be it known that I, JOHN FRANK DYE, a citizen of the United States, residing at Newport, in the county of Campbell and State of Kentucky, have invented certain new and useful Improvements in Antirattlers and Thill-Supports; and I do hereby declare the following to be a full, clear, and exact description of the invention, such as will enable others skilled in the art to which it appertains to make and use the same.

This invention relates to a combined antirattler and thill-support, but more particularly to those employed in carriages and other vehicles.

In devices of this character it has been the practice to provide a rigid extension on the yoke of the coupling-clip, the end of which is engaged by the end of a spring which is secured to the thill-iron to support the same in an elevated position when not in use, and to be engaged by the body of the spring when it serves as an antirattler, or it has been suggested to secure a bracket or foot-piece to the thill-iron on the end of which is a cam-surface or nose adapted to have the end of a U-shaped spring, arranged between the clip and the thill-iron, abut against the same. It has also been proposed to provide a strip on the thill-iron which engages a curved spring secured to the axle, or to provide a spring which is carried by the thill and which rests upon the curved end of an extension of the yoke. These, like other devices heretofore employed, do not properly serve as antirattlers, for the reason that the spring acts in a line approximately with that of the pull of the horse, while the jolting is ordinarily in a line transversely of the pull; nor has provision, in such cases, been made to compensate for the wear of the spring other than the tension of the same.

The primary object of my invention is to overcome these objectionable features by providing a simple, effective and durable device which will exert a pressure on the thill-coupling transversely to the line of draft, and to support the thills after they have been elevated.

A further object is to so construct the parts that the wear of the same will be compensated for by their coaction.

With these and other objects in view the invention consists in the construction and combination of the parts, as will be hereinafter described, and more particularly pointed out in the claims at the end of the description.

Referring to the accompanying drawings, forming a part of this specification, Figure 1 is a sectional view through the axle, illustrating in elevation the thill-coupling with the invention applied thereto in position to act as an antirattler. Fig. 2 is a view similar to Fig. 1, except that the invention is in position to support the shafts in an elevated position; and Fig. 3 illustrates a slightly modified form.

In the drawings, A may designate the axle; B, the axle-bed; C, the clip; D, the shackle or coupling; E, the coupling-bolt; F, the thill-iron; G, the thill, and H the yoke, all of which may be of the well-known or of any preferred form.

The yoke H has a spring h extending outwardly therefrom, which is rigidly secured to or formed integrally with said yoke. This spring is curved and may be approximately semicircular and arranged below the thill-coupling concentric with the coupling-bolt, or it may be arranged eccentrically therewith, if so desired, the curved portion of the spring serving as a bearing-surface for the curved portion i of the spring I. The spring I is secured to the thill-iron in any suitable manner, but preferably by the same bolt i' which secures the thill-iron to the thill, and is prevented from lateral movement on said iron by having its ends i^2 turned slightly upward to embrace the sides of the thill-iron, or the end may rest in a recess in said iron, as is found most desirable. The end i^3 of the spring I is curved slightly opposite to the curved portion i so as to permit the spring to slide on the spring h and to abut against and rest upon the slightly inturned end h' of the spring h to serve to retain the thills in an elevated position, as shown in Fig. 2.

It will be seen by the construction shown that when the vehicle is in use the tendency of the springs is to exert a pressure in the direction of the dotted line J and transversely to the pull of the horse, it making little or no difference whether the pressure be upward on this line or downward, the same varying according to the arrangement of the springs and the difference in strength of said springs. The

two springs will each compensate for the wear of the other, and yet will form a rigid support for the thills when elevated.

When the spring *h* is arranged eccentrically to the coupling-pin E, as is sometimes the case, it will be seen that as the thills are raised the outer end of said spring will tend to force the end of the spring I a greater distance away from the pin, thereby increasing the friction of the two abutting surfaces, which will aid in retaining the thills elevated when they have been raised.

I may alter the exact construction of the parts, if so desired, or I may alter the arrangement of the springs, as shown in Fig. 3. Here the end of the spring I is arranged to contact with the inner surface of the spring *h* instead of the outer surface thereof, the end of the spring in this case resting against the outwardly-curved end h^2 of the spring when the thills are elevated, thereby serving as a ready support therefor. Such changes being within the scope of my invention, I do not wish to confine myself to the exact construction shown, as the same may be varied in some instances without departing from the spirit of my invention.

Having thus fully described my invention, what I claim as new, and desire to secure by Letters Patent of the United States, is—

1. An anti-rattling device for thill couplings comprising a pair of springs, one adapted to be rigidly secured at one end to the axle and the other to be rigidly secured at one end thereof to the thill of the vehicle, each having a spring portion projecting from the axle and thill, respectively; said projecting spring portions being curved and arranged to overlap each other so as to slide one upon the other and be held in reciprocally yielding contact, substantially as described.

2. An anti-rattler and thill support comprising a pair of springs, one of which is adapted to be rigidly secured to the axle and the other to the thill of the vehicle, each having an approximately semi-circular spring portion; said spring portions being arranged to overlap each other and provide an extended bearing surface and to slide one upon the other in reciprocally yielding contact, whereby a strain may be exerted in an approximately vertical plane to prevent rattling of the parts when the thills are in use, and to support said thills in a raised position when not in use, substantially as described.

In testimony whereof I affix my signature in presence of two witnesses.

JOHN FRANK DYE.

Witnesses:
J. A. E. CRISWELL,
CHARLES E. RIORDON.