(No Model.)

2 Sheets—Sheet 1.

# L. GAGNAUX.

## MUSIC BOX.

No. 550.786.

Patented Dec. 3, 1895.

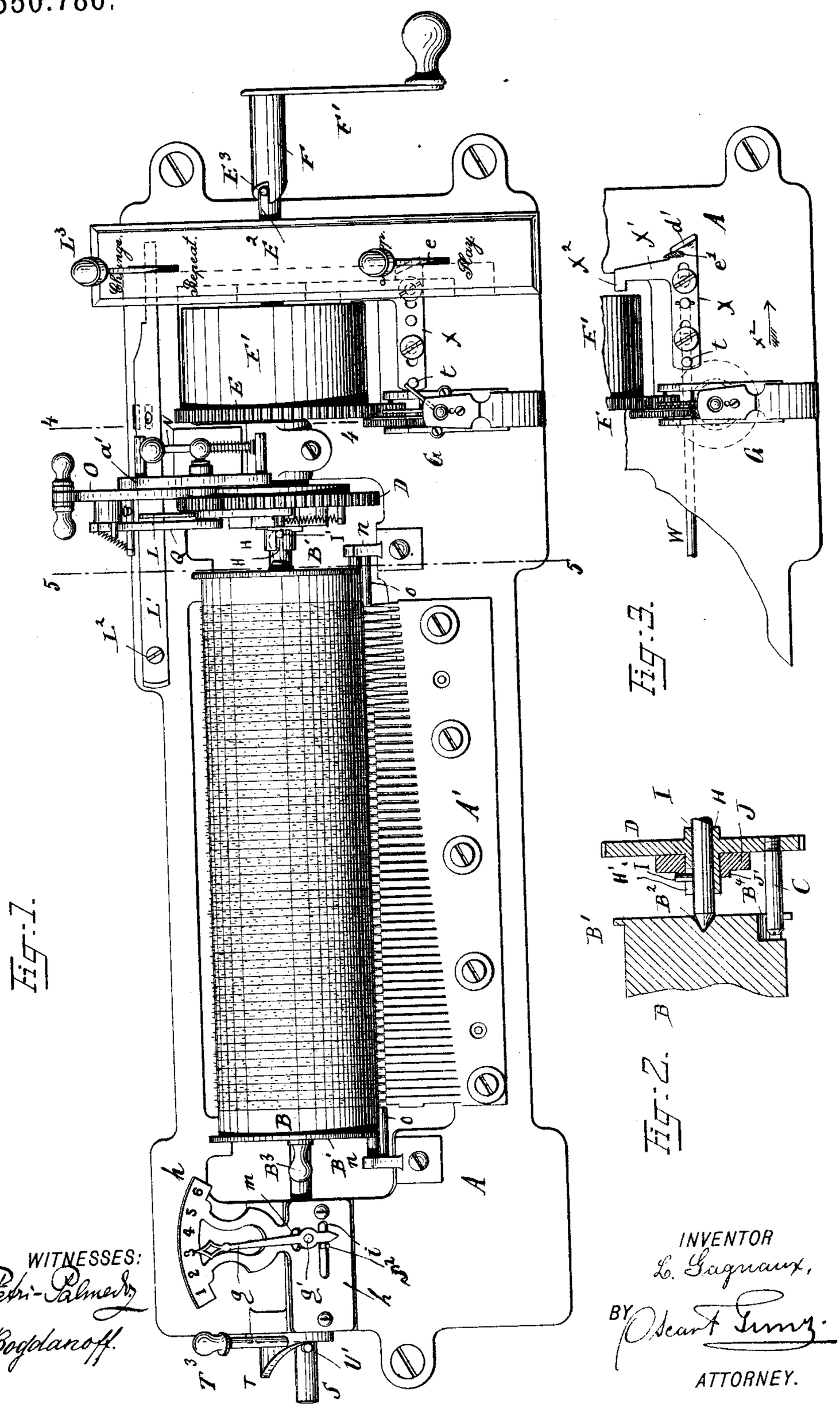


WITNESSES:

L. Petri-Palmedo

D. Bogdanoff.

INVENTOR

L. Gagnaux,

BY Oscar Krantz.

ATTORNEY.

ANDREW B. GRAHAM, PHOTO LITHO WASHINGTON D.C.

(No Model.) 2 Sheets—Sheet 2.

# L. GAGNAUX.

## MUSIC BOX.

No. 550,786. Patented Dec. 3, 1895.

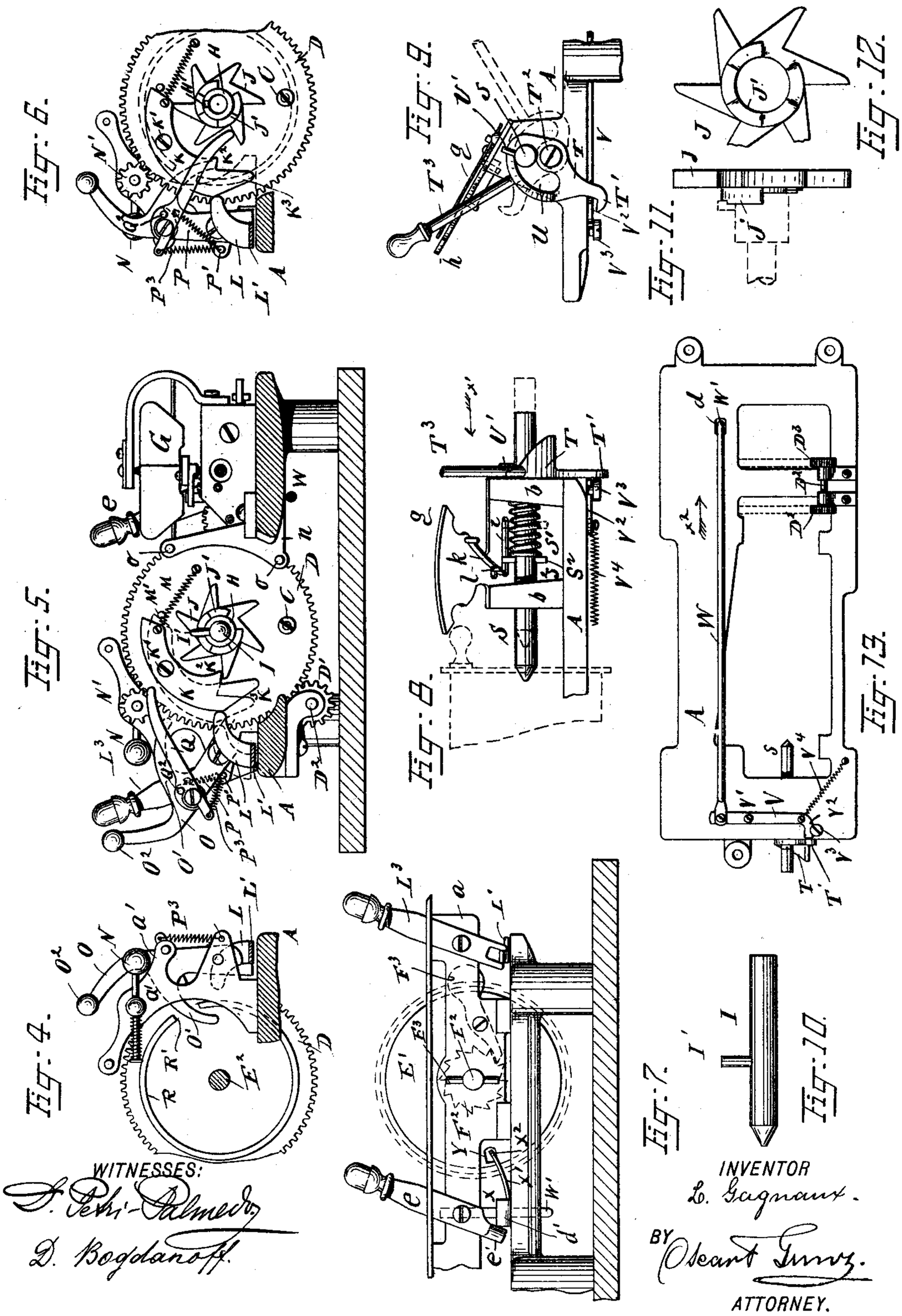


WITNESSES:

F. Petri-Palmedo

D. Bogdanoff.

INVENTOR

L. Gagnaux.

BY Oscar Gunz.

ATTORNEY.

# UNITED STATES PATENT OFFICE.

LOUIS GAGNAUX, OF ST. CROIX, SWITZERLAND, ASSIGNOR TO M. J. PAILLARD & CO., OF NEW YORK, N. Y.

## MUSIC-BOX.

SPECIFICATION forming part of Letters Patent No. 550,786, dated December 3, 1895.

Application filed March 12, 1895. Serial No. 541,468. (No model.)

*To all whom it may concern:*

Be it known that I, LOUIS GAGNAUX, a citizen of Switzerland, and a resident of St. Croix, Switzerland, have invented certain new and useful Improvements in Interchangeable Music-Boxes, of which the following is a specification.

This invention relates to improvements in that class of music-boxes in which the pin-cylinder can be removed to be replaced by another playing different melodies.

The object of my invention is to provide a new and improved music-box of this kind which is simple in construction, runs a long time without requiring rewinding, and in which the cylinder is so mounted that it can only be removed at the end of a tune, thus preventing injury to the teeth, pins, and dampers.

The invention consists in the combination, with the cylinder and driving-gear, of a spring-pressed bearing-pin, a cam for shifting said pin, and a lever connected with the starting and stopping device and serving to lock said cam until the cylinder has completed a rotation and has been stopped.

The invention further consists in a novel arrangement of the tune-changing cam and the means for operating the same.

The invention also consists in a novel tune-selecter and tune-indicator and in the construction and combination of parts and details, as will be fully described and set forth hereinafter, and finally pointed out in the claims.

In the accompanying drawings, Figure 1 is a plan view of my improved interchangeable music-box. Fig. 2 is a detail vertical longitudinal sectional view of one end of the cylinder, the changing-cam, and motor-wheel. Fig. 3 is a detail plan view of the stopping mechanism, parts being broken out. Fig. 4 is a vertical transverse sectional view on the line 4 4, Fig. 1, parts being omitted. Fig. 5 is a vertical transverse sectional view on the line 5 5, Fig. 1, the pin-cylinder being omitted. Fig. 6 is a similar view showing the parts in different positions and parts broken out. Fig. 7 is an end view of the driving-gear, showing the stopping and starting lever and the tune-changing lever. Fig. 8 is a rear elevation of the sliding bearing-spring pin for that end of the cylinder opposite the one connected with the driving-gear. Fig. 9 is an end view of the same. Fig. 10 is a detail side view of the sliding bearing-pin passed through the tune-changing cam. Fig. 11 is an edge view, and Fig. 12 a face view, of the toothed wheel and tune-changing cam. Fig. 13 is a plan view of the under side of the base-plate on a reduced scale.

Similar letters of reference indicate corresponding parts.

The comb A′, of the usual construction, is fastened on the base-plate A. The pin-cylinder B is constructed without a shaft and consists of a plain cylinder provided with the end plates B′, of slightly-greater diameter than the cylinder, so as to serve as guards or protectors for the pins when the cylinder rests upon a smooth surface—for example, a table—and also while the cylinder is being placed into the box or removed therefrom.

Each end plate is provided with a central recess $B^2$ for receiving the tapered ends of the bearing-pins. Furthermore, each end plate is provided with a handle-knob $B^3$, and one of the end plates is provided at its rim with a notch or recess $B^4$ for receiving the pin C, projecting laterally from one face of the toothed motor-wheel D.

The toothed wheel D is engaged by a pinion D′ on a short shaft $D^2$, mounted on the under side of the base-plate A, and carrying on its opposite end a pinion $D^3$, engaging the toothed wheel E, which is driven by a spiral spring located within a drum E′, through which a spindle $E^2$ passes, on which one end of the spring is fastened, the opposite end being connected with the drum E′.

The spindle $E^2$ has a cross-pin $E^3$, which is engaged by the toothed tubular key F, fitting on the spindle, and provided on its outer end with a crank F′ for turning it. A ratchet-wheel $F^2$ is fixed on the spindle $E^2$ and is engaged by a weighted pawl $F^3$, pivoted to one of the standards *a*, in which said spindle is mounted to turn.

The toothed wheel E is in gear with the governing and flier mechanism G, of the usual construction.

The motor-wheel D rotates with its tubular

hub H, provided with a longitudinal slot H'. A pin I, fitting in the bore of the hub H, has its outer end tapered, and is provided with a stud I', that can move in the slot H' as the pin I slides in and out of said hub. A toothed wheel J, resting against the side of the motor-wheel and mounted to turn on the slotted tubular hub H, is provided with an annular stepped cam J', against which the stud I' rests. A curved flat pawl-lever K is pivoted at K' to the side of the wheel D, and is provided near one end on its inner edge with the shoulder $K^2$, that can act on the ends of the teeth of the toothed wheel J. At the same end the pawl-lever is provided on its outer edge with the bevel $K^3$, on which the curved cam-spur L can act that projects from the tune-changing lever L', pivoted at $L^2$ on the top of the base-plate and having its outer end engaged by the forked lower end of the lever $L^3$, pivoted to the standard *a*.

A helical spring M has one end attached to the upper end of the pawl-lever K and the other end attached to the side of the wheel D, and said spring draws the upper end of the pawl-lever against a stop-pin M', projecting from the side of the wheel D, whereby the beveled end of the pawl-lever is thrown outward toward the periphery of the wheel D, which is its normal position. A pinion N', engaging the wheel D, operates the automatic check N, which forms no part of this invention.

A lever O, having a curved arm O', is pivoted to the standard *a'* and is provided at its upper end with a handle $O^2$, and is to be known as the "tune-selecting" lever. A helical spring P has one end secured to said lever above its pivot, and the other end is secured to the standard *a'*, which spring serves to hold said lever O against a stop-pin P' on the standard *a'*, this being the normal position of the said lever, as shown in Fig. 5. A pawl-arm Q is pivoted at Q' to the lever O and has one end secured to a helical spring $P^3$, the opposite end of which is secured to the standard *a'*, and which spring holds the pawl-arm raised and against the stop-pin $Q^2$ on the lever O, as is also shown in Fig. 5.

An annular ridge R, provided with a recess R', is formed on the back of the wheel D, as shown in Fig. 4.

At that end of the base-plate opposite the one at which the spring-motor is located two short standards *b* project upward from said base-plate, and in the same the bearing-pin S is mounted to slide lengthwise and parallel with the base-plate, one end of said pin S being tapered. A helical spring S' surrounds said bearing-pin S between one of the standards *b* and a cross-pin or stud $S^2$ on said pin S, which spring presses the said bearing-pin S in the direction of the arrow *x'*, Fig. 8. A cam T, provided with a hook T', is pivoted at $T^2$ to the outer surface of one standard *b*, and is provided with a handle $T^3$ for turning it. The cam T has a segmental slot U, through which the end of the bearing-pin S passes, and from the projecting end of the bearing-pin a stud U' projects, which rests on the edge of the cam. A lever V is pivoted at V' to the under side of the base-plate below the standards *b*, and is provided at one end with an arm $V^2$, projecting toward the end of the base-plate. Said end of the lever is pressed against a stop screw or pin $V^3$ by a helical spring $V^4$, attached to said lever and to the base-plate. The opposite end of the lever V is pivoted to one end of a rod W, extending along the under side of the base-plate to a slot *d* in the base-plate, through which slot the upwardly-extending arm W' of said rod projects, and the upper end of said arm is secured to a slide X on the upper surface of the base-plate, which slide has an arm X', provided with a spur $X^2$, that can pass into a recess Y in the outer sides of the drum E', as shown in dotted lines in Fig. 1 and in full lines in Fig. 7. The slide X is provided at its outer end with a beveled flange *d'*, on which the beveled lower end *e'* of the starting and stopping lever *e*, pivoted on the standard *a*, can act.

The tune-indicating pointer *g* is pivoted at *g'* to the inclined plate *h*, fastened on the standards *b*, and the stud $S^2$ on the bearing-pin S projects through the slot *i* of the plate *h* and rests against the pointer *g* below the pivot of the same. As the spring S' exerts a pressure in the direction of the arrow *x'*, Fig. 8, it tends to bring the pointer *g* to the numeral 1 on the plate *h*. A spring *k*, secured to the under side of the plate *h*, bears against a pin *l*, projecting above the pivot *g'* from the pointer *g* through a slot *m* of said plate *g*.

At the ends of the cylinder-slot in the base-plate two standards *n* are attached to the base-plate at the edge of said slot, and from the top and bottom ends of said standards the pins *o* project toward each other, which pins *o* prevent the pins on the pin-cylinder B from coming in contact with the teeth of the comb A' while inserting the cylinder, as the circular end plates of the cylinder rest against the pins *o* and thus guide the cylinder downward and toward the rear and from the ends of the teeth.

The operation is as follows: When there is no cylinder in the box, the cam T is in the position shown in dotted lines in Fig. 9 and the bearing-pin S is withdrawn and is in the position shown in dotted lines in Fig. 8. A cylinder is grasped by the buttons $B^3$ and placed into the slot in the base-plate in such a manner that the pin C on the motor-wheel D, which pin C is now in its lowest position, passes in the notch $B^4$ of the cylinder. The cam T is then swung into the position shown in full lines in Fig. 9, permitting the spring S' to press the pin S in the direction of the arrow *x'*, Fig. 8, and said pin under the action of the spring presses the cylinder in like direction and against the pin I, which is pushed into its hub until its stud I' is pressed firmly against the cam-track J' on the toothed wheel J.

To start the music-box, the lever $e$ is moved from the position shown in Fig. 7 to the left, so as to cause its beveled lower end $e'$ to act on the inclined or beveled flange $d'$ of the slide X and to move said slide in the direction of the arrow $x^2$, Figs. 3 and 13, whereby the spur or prong $X^2$ on the arm X′ of said slide is removed from the recess Y in the drum E′, permitting the spring in the drum to turn the gearing, and by means of the same the pin-cylinder, as the pin C on the motor-wheel D, which is operated from said spring, is within the notch of the cylinder. By the movement of the rod W, connected with the slide X, in the direction of the arrow $X^2$, the arm $V^2$ on the end of the lever V is moved outward in the inverse direction of the arrow $x^2$ and over the prong of the hook T′, as shown in Fig. 9, as said hook is now in its lowest position. The cam T is thereby locked in place and it is impossible to remove the cylinder.

When the tune has been played—that is, when the cylinder has made one turn and the lever $e$ has been pushed back into the position shown in Fig. 7, so that its lower end clears the beveled flange $d$ of the slide X—the spur or prong $X^2$ can pass into the recess Y in the end of the cylinder E′, thus permitting the slide X to move in the inverse direction of the arrow $x^2$ under the action of the spring $V^4$. The pin $t$ on the slide X now engages the flier G, and the mechanism is stopped and the spring-drum is locked by the spur or prong $X^2$ passing into the recess Y. The end $V^2$ of the lever V is withdrawn from the hook T′ of the cam T, permitting the same to be turned so as to withdraw the pin S, whereby the cylinder is released and can be lifted out of the box. In case the tune played is to be changed for each rotation of the cylinder, the tune-changing lever L is properly adjusted. As the wheel D rotates, the beveled edge $K^3$ of the cam K comes in contact with the end of the spur L and is pushed toward the center of the wheel D—that is, from the position shown in dotted lines in Fig. 5 to the position shown in full lines—causing the shoulder or offset $K^2$ to engage a tooth of the toothed wheel J, whereby the latter is turned on the hub H, and the pin I is moved lengthwise a distance sufficient to shift the cylinder lengthwise the distance required for a change of tune. After the pivoted pawl-lever K has turned the toothed wheel J the required distance it clears the spur L and is brought back into its original position by the spring M. If at any time when the cylinder is at rest the box is to be adjusted to play any desired tune, the tune-selecting lever O is brought from the position shown in Fig. 5 into the position shown in Fig. 6, so as to cause the pawl-arm Q to turn the wheel J the distance of one tooth. This is repeated until the cylinder has been shifted lengthwise the requisite distance. Whenever the lever O is released, the springs P and $P^3$ throw it and its pawl-arm Q back to the normal position.

When the cylinder is locked in position, as it can be only after completing a tune, the recess R′ in the ridge R will be in the position relatively to the fixed parts shown in Fig. 4, and as the arm O′ of the lever O can pass through said recess R′ the lever O can be swung forward, as described, to shift the cylinder. At any other time except when the cylinder is locked this is not possible, as the recess R′ will then not be in the proper position, and the end of the arm O′ strikes the ridge R and is then checked and cannot be swung forward sufficiently to shift the cylinder. As the cylinder is shifted lengthwise to change the tune, the pin S is shifted correspondingly, and this causes a corresponding movement of the pointer $g$, which at all times points to the number of the tune being played.

Having thus described my invention, I claim as new and desire to secure by Letters Patent—

1. In a music-box, the combination, with a cylinder driving wheel, of a cylinder bearing-pin mounted to slide lengthwise in the center of said wheel, a cam-track wheel mounted on said wheel to turn on said wheel and also to rotate with the same, which cam-track wheel acts on the bearing-pin, and means for shifting said cam-track wheel, substantially as set forth.

2. In a music-box, the combination, with a cylinder driving-wheel, of a cylinder bearing-pin mounted to slide lengthwise in the center of said wheel, a cam-track wheel mounted on said driving-wheel to turn on the wheel and to rotate with the same, and acting on the bearing-pin, a lever pivoted to the wheel and serving to shift said cam-track wheel at intervals, and means for engaging said lever with the cam-track wheel, substantially as set forth.

3. In a music-box, the combination with a cylinder driving-wheel, of a central longitudinally slotted hub on the same, a sliding-cylinder bearing-pin in said hub, a stud projecting from said pin through the slot in the hub, a cam-track wheel mounted to turn on said hub against which cam-track the stud on the bearing-pin rests, and means for turning said cam-track wheel, substantially as set forth.

4. In a music-box, the combination with a cylinder driving-wheel, of a sliding cylinder bearing-pin mounted centrally in said wheel to slide lengthwise, a cam-track wheel mounted on said driving-wheel and acting on the sliding-pin, a lever pivoted on the driving-wheel and adapted to act on said cam-track wheel to turn the same at intervals, a spring for holding said lever normally away from the cam-track wheel and means for engaging said lever at intervals with parts of the cam-track wheel, substantially as set forth.

5. In a music-box, the combination with a

cylinder driving-wheel, of an annular ridge projecting from one face of said wheel and having a recess, a cylinder shifting cam-track wheel mounted on the driving-wheel, a lever pivoted on the frame of the mechanism, for turning said cam-track wheel to any desired position, and a fixed arm on said lever extending toward the annular ridge on the wheel, substantially as set forth.

6. In a music-box, the combination with a cylinder driving-wheel, of a cam-track wheel mounted centrally on said driving-wheel and concentric therewith, and means for shifting the cylinder lengthwise by means of said cam-track wheel, substantially as set forth.

7. In a music-box, the combination with a base-plate having a recess for receiving the pin-cylinder, of standards projecting upward from the edge of the slot, and pins projecting laterally from the top and bottom of said standards to form protectors for the cylinder while inserting or removing the same, substantially as set forth.

8. In a music-box, the combination with a cylinder and a driving-wheel for the same, of a bearing-pin for each end of the cylinder, a spring acting on one pin to press the same against the end of the cylinder and to press the cylinder lengthwise, the other pin being mounted to slide through the center of the driving-wheel, a stud on said second pin, a cam-track wheel surrounding said pin, and against which the said stud rests and means for shifting said cam-track wheel, substantially as set forth.

9. In a music-box, the combination with a cylinder and a driving-wheel for the same, of two longitudinally movable bearing-pins for said cylinder, a spring acting on one pin, a cam-track wheel acting on the other pin, and a tune indicating pointer actuated by the spring pressed bearing-pin, substantially as set forth.

10. In a music-box, the combination with a cylinder and a driving-wheel for the same, of longitudinally moving bearing-pins at the ends of the cylinder, a spring acting on one pin and pressing the same against one end of the cylinder, a cam-track wheel acting on the other bearing-pin, and a cam-lever for moving the spring pressed pin against its spring, substantially as set forth.

11. In a music-box, the combination with a cylinder and a driving-wheel for the same, of two longitudinally movable bearing-pins for the cylinder, a spring acting on one pin, a pivoted cam-lever having a curved slot through which said pin passes and a stud projecting from the pin and resting against the cam edge of said cam-lever, substantially as set forth.

12. In a music-box, the combination with a rotating driving mechanism element having a recess, of a movable piece having a spur that can pass into said recess, a spring acting on the movable piece, a lever connected with the movable piece, a cylinder, a bearing-pin for the cylinder, a cam-lever for shifting said bearing-pin lengthwise, and means for engaging said cam-lever with the lever connected with the sliding-piece, substantially as set forth.

13. In a music-box, the combination with a cylinder and longitudinally movable bearing-pins for the same, of a cam-lever for moving one of said pins from the end of the cylinder, a hook on said lever, a locking lever for engaging said hook and locking the cam-lever, and means for controlling said locking lever from one of the rotative elements of the music-box motor mechanism, and a stopping and starting lever for shifting said locking lever to start and stop the box, substantially as set forth.

14. In a music-box, the combination with a cylinder and a rotating spring-drum for driving said cylinder, which drum has a recess, of a slide having a spur that can pass into said recess, a beveled lug on one end of said slide, a pivoted lever having a beveled lower end to act on the beveled lug of the slide, and a spring acting on said slide, substantially as set forth.

In testimony that I claim the foregoing as my invention I have signed my name in presence of two subscribing witnesses.

LOUIS GAGNAUX.

Witnesses:
EUGÈNE THORENS,
CHARLES CHAMPOD.