(No Model.)

C. E. BILLINGS.

WRENCH.

No. 532,634. Patented Jan. 15, 1895.

Fig. 2.

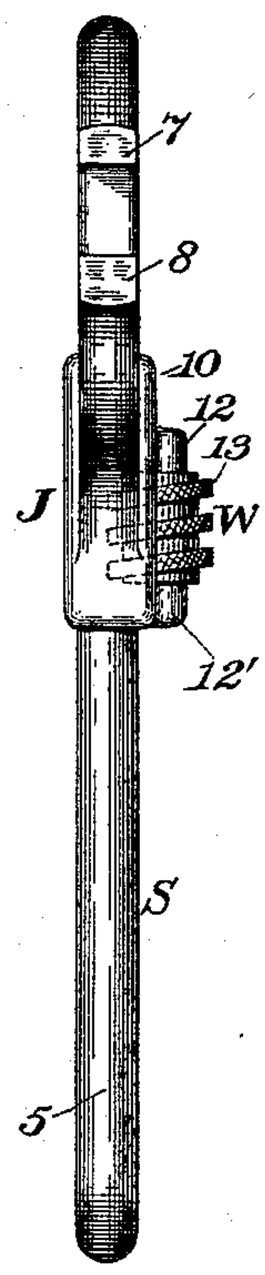

Fig. 3.

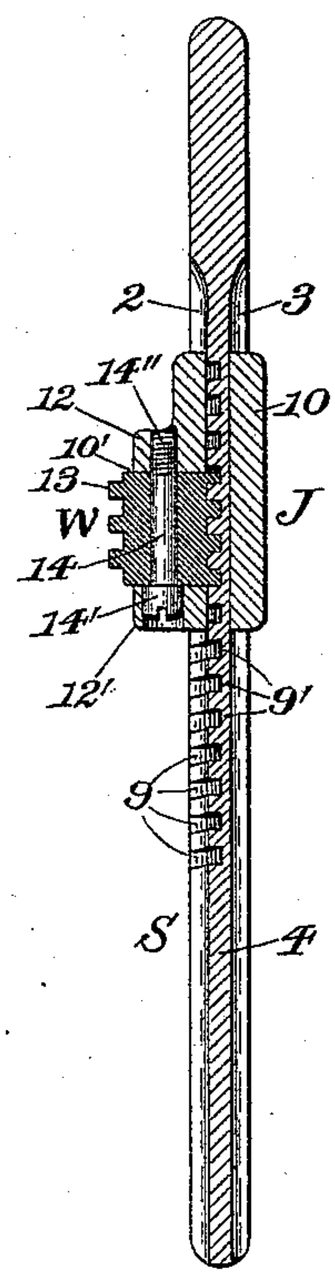

Fig. 1.

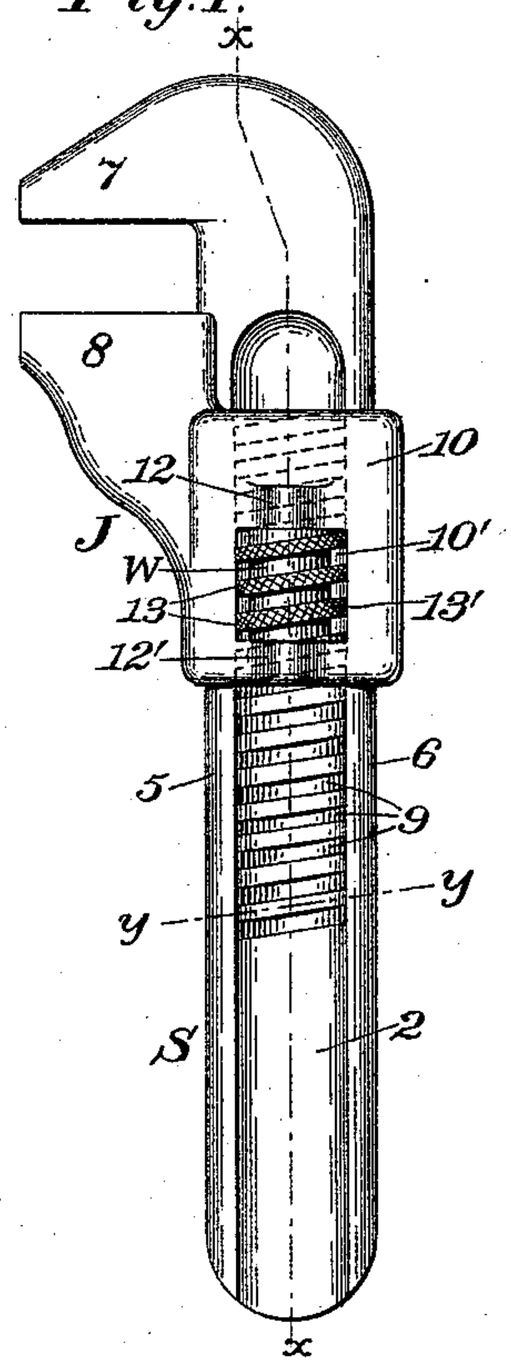

Fig. 4.

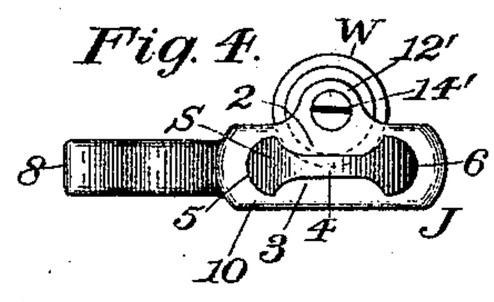

Fig. 5.

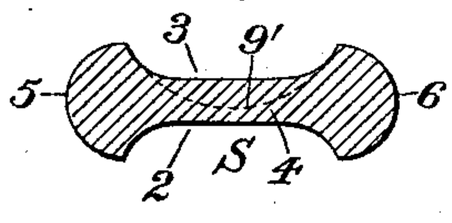

Witnesses:
G. L. Edwards Jr.
Fred. J. Dole.

Inventor:
Charles E. Billings,
By his Attorney,
F. H. Richards

THE NORRIS PETERS CO., PHOTO-LITHO., WASHINGTON, D. C.

UNITED STATES PATENT OFFICE.

CHARLES E. BILLINGS, OF HARTFORD, CONNECTICUT.

WRENCH.

SPECIFICATION forming part of Letters Patent No. 532,634, dated January 15, 1895.

Application filed October 19, 1894. Serial No. 526,377. (No model.)

To all whom it may concern:

Be it known that I, CHARLES E. BILLINGS, a citizen of the United States, residing at Hartford, in the county of Hartford and State of Connecticut, have invented certain new and useful Improvements in Wrenches, of which the following is a specification.

This invention relates to wrenches, and has for its object to furnish an improved tool of this general character combining great rigidity and strength with extreme lightness and simplicity and ease of manipulation.

In the drawings accompanying and forming part of this specification, Figure 1 is a side elevation of a wrench constructed in accordance with my present invention. Fig. 2 is a front elevation of the same. Fig. 3 is a longitudinal section in the line *x—x*, Fig. 1. Fig. 4 is an under side view of the same. Fig. 5 is a transverse section on an enlarged scale, taken in line *y—y*, Fig. 1, and showing the construction of the wrench-shank.

Similar characters designate like parts in all of the figures.

According to my present invention the shank or handle of the wrench comprises a pair of relatively thick, longitudinal edge-bars, or tension-members, and a relatively thin, combined strain-sheet and rack-plate connecting the edge-bars, and formed integral therewith by channeling the sides of the shank to produce such strain-sheet or reduced web, and one side of said rack-plate is provided with rack-teeth, formed by oblique grooves, which preferably extend but part way through the web and die out at the longitudinal edges of the channels, so that only a portion of the metal of the shank is removed to form said grooves, and at points in line with each other and wholly within the rack-plate, and where the removal of the metal will not appreciably impair the strength of the shank. In connection with said shank I provide a movable jaw having a sleeve formed with a longitudinal bore or guide-way preferably coinciding in outline with the cross-sectional outline of the channeled shank, and upon said sleeve I mount a worm adapted to mesh with the teeth of the rack upon the shank and travel along said rack carrying with it the movable jaw and sleeve, or carrier, to obtain the required adjustments of the wrench.

The shank or handle of my improved wrench is designated in a general way by S, and is shown herein as consisting of two edge-bars or tension-members, 5 and 6, parallel with each other and having their surfaces unbroken so as to maintain their strength; and a relatively thin, combined strain-sheet and rack-plate, 4, integral with and joining said edge-bars by their inner sides, one with the other, the strain-sheet or reduced web being formed by channeling the opposite faces of the shank longitudinally, as at 2 and 3, these channels being shown herein as running from the end of the handle or shank to a point close to the fixed jaw of the wrench. Both the shank and the fixed jaw are preferably of the same cross-section, as will be clearly seen by reference to Figs. 2 and 3, and are also preferably formed from a single piece of bar-steel. The two channels formed in the sides of the shank, at 2 and 3, are shown as similar in outline and of equal depths, so that the web 4 occupies a central position, when the shank is viewed in cross-section (see Figs. 4 and 5), in line with the edge-bars or tension-members 5 and 6. By this organization of the tension-members and the strain-sheet any force exerted upon either of these members, or edge-bars, will be transmitted through the strain-sheet and substantially along the axial line connecting such edge-bars, that is, along the neutral axis of the wrench.

Upon the side of the strain-sheet the channel 2 is traversed obliquely by a series of parallel, countersunk grooves forming rack-teeth, such as 9. It will be seen that, in the formation of these grooves, only a portion of the metal of the web is removed, and that the two edge-bars or heads, 5 and 6, are still connected by a series of cross-bars or braces, the upper faces of which are flush with the sides of the strain-sheet, and therefore maintain the central disposition thereof relatively to the edge-bars. The curved, inner walls of the grooves are shown herein, at 9′, as extending about two-thirds of the way through said strain-sheet, so that only a very small portion of the shank, when viewed in cross-section, is removed. By thus organizing the edge-bars, or

tension-members, and the strain-sheet, or rack-plate, to form an I-bar, having substantially the cross-section shown in Fig. 5, the strength of the wrench-shank is maintained practically unimpaired, and sufficient space obtained to form, in the body of the strain-sheet, rack-teeth with which may engage co-operating, intermeshing teeth formed upon a rotatable member, or worm, carried by the adjustable member, or traveler, and controlling the movements thereof. The rack-teeth, being disposed substantially transversely to the strain-sheet 4, serve to transmit the lateral strains from one edge-bar to the other; and said strain-sheet being of small thickness relatively to the edge-bars, and the rack-teeth being sunk well into the strain-sheet, as before stated, and as illustrated in the drawings, the neutral axis of the shank, as a whole, passes through said rack-teeth and is intersected by said teeth, so that the strain or force of the traveler is transmitted to the shank at a point central of its cross-sectional area, and hence such strain or force does not of itself tend in any way to bend the shank, either in a crosswise or a flatwise direction.

The movable jaw of the wrench is shown at 8, as forming a part of a traveler designated in a general way by J. The main portion of said traveler is shown herein as a sleeve 10, having a longitudinal bore or guideway, which coincides in outline with the cross-sectional outline of the shank of the wrench, so that said sleeve is held securely against rotative or lateral movement, not only by the usual rounded edges common to wrench shanks, but also by the re-entrant or sloping portions of the channel surfaces, in such a manner that any torsional strain upon the movable jaw is taken up by the abutment of a projecting portion, or wall, of the longitudinal bore of the sleeve, against two diagonally-opposite stop-faces or walls of the channels in the shank. The sleeve, 10, is herein shown as having an open side formed by a rectangular, cut-away portion, as shown at 10′, and as provided also with laterally-extending shoulders or lugs, 12 and 12′, having aligned, longitudinal openings or bores, in parallelism with the side-walls of the shank and with the inner walls of the web thereof. The upper of these openings is preferably screw-threaded while the lower one is smooth, but the positions might, of course, be reversed. These shoulders or lugs lie at the upper and lower sides, respectively, of the rectangular opening and have inner, plane-faces disposed transversely to the axis of the shank. Between these parallel plane-faces the worm, designated in a general way by W, is adapted to be received and to be held thereby against longitudinal movement with respect to the handle or shank of the wrench, and said longitudinal openings or bores in said shoulders are positioned to receive a carrier-pin, which is adapted to maintain said worm against movement transversely of the axis of the wrench and to permit rotation of the worm. This carrier-pin may be of any suitable construction, and is shown herein as a screw-bolt having a smooth shank, 14, a rounded head, 14′, seated in the bore of the shoulder 12′, and a screw-threaded end or point engaged by the screw-threads of the bore in the shoulder.

In assembling the parts, the traveler is first slipped upon the shank and the worm is inserted laterally into the opening 10′ at the side thereof, after which the bolt is passed through the bore of the shoulder 12′, through the longitudinal aperture or bore in the worm and screwed into engagement with the internal-threads of the cap and shoulder 12, the length of the bolt being preferably such that, when in position, it will be entirely within the extreme ends of the respective shoulders or abutments.

The spiral thread, 13, of the worm is shown herein as engaging, when the parts are assembled, with the rack-teeth of the shank, and as extending preferably to the bottom-walls 9′ of the oblique grooves 9, so as to form a compact structure. In order to facilitate the adjustment of the movable jaw the spiral-thread of the worm is also shown as having a continuous, milled face, so that when manipulated it may be easily and quickly turned.

It will be seen from the foregoing that by means of the worm-and-rack gear described a very strong and compact organization of parts is obtained without weakening the handle or body of the wrench. The movable jaw or traveler is perfectly and positively maintained in position, as any torsional or angular strains thereupon will be taken up by abutting faces engaging obliquely-opposite ends or sides thereof, and which stop-faces are so disposed that any tension brought upon one in one direction is neutralized by its transferrence in part to the other, upon which it is brought to bear in an opposite direction. Moreover the construction of the shank is such that any strain brought upon one tension-member is transmitted equally to the other along the neutral cross-sectional axis of the shank, that is, along a single path of resistance, the rack-teeth serving also to connect and brace the edge-bars or tension-members and hence there can be no crushing force exerted upon any portion of the shank unless it is exerted along and through this axial path. It will be evident that for this reason, and by reason of the further fact that the traveling jaw and the worm are located entirely outside of the shank, a very simple and substantially solid structure is secured, in which very great strength and durability are combined with extreme lightness. Moreover the wrench may be readily adjusted with one hand and the worm manipulated by the thumb thus insuring also simplicity and perfection of operation.

Having thus described my invention, I claim—

1. In a wrench, the combination with a

shank having relatively thick longitudinal edge-bars, and a relatively thin combined strain-sheet and rack-plate formed integral therewith and having rack-teeth in one of its sides; of a traveler mounted upon and surrounding said shank and adapted for carrying a revoluble worm, and a worm revolubly supported on said traveler and in position and adapted to mesh with the teeth of said rack-plate, whereby the force of the traveler is transmitted to the wrench-shank along the neutral axis of the same, substantially as described and for the purpose specified.

2. In a wrench, the combination with a shank having relatively thick longitudinal edge-bars, and a relatively thin combined strain-sheet and rack-plate integral therewith and having in one of its sides rack-teeth intersecting the neutral cross-sectional axis of the shank; of a traveler mounted upon and surrounding said shank and adapted for carrying a revoluble worm, and a worm revolubly supported on said traveler and in position and adapted to mesh with the teeth of said rack-plate, whereby the force of the traveler is transmitted through the rack-teeth and the body of the strain-sheet to the wrench-shank and along the neutral axis of the same, substantially as described and for the purpose specified.

3. In a wrench, the combination with a shank having relatively thick longitudinal edge-bars, and a relatively thin combined strain-sheet and rack-plate integral therewith and having in one of its sides a series of grooves formed with curved rear walls intersecting the neutral cross-sectional axis of the shank and dying out upon the surface of the strain-sheet to thereby form rack-teeth connecting and bracing the edge-bars in the direction of transverse strains; of a traveler mounted upon and surrounding said shank and adapted for carrying a revoluble worm, and a worm revolubly supported on said traveler and in position and adapted to mesh with the teeth of the rack-plate, whereby the force of the traveler is transmitted through the rack-teeth and the body of the strain-sheet to the wrench-shank and along the neutral axis of the same, substantially as described and for the purpose specified.

4. In a wrench, the combination with a shank having relatively thick longitudinal edge-bars, and a relatively thin combined strain-sheet and rack-plate integral therewith and having in one of its sides a series of grooves formed with curved rear walls intersecting the cross-sectional axis of the shank and dying out upon the surface of the strain-sheet to thereby form rack-teeth connecting and bracing the edge-bars in the direction of transverse strains; of a traveler mounted upon and surrounding said shank and embodying a sleeve having its longitudinal bore corresponding in outline with the cross-sectional outline of said shank, a transverse opening in one side of said sleeve, and a movable jaw integral with the sleeve; and a worm revolubly carried by said traveler and in position and adapted to mesh with the teeth of the rack-plate, whereby the force of the traveler is transmitted through the rack-teeth and the body of the strain-sheet to the wrench-shank and along the neutral axis of the same, substantially as described and for the purpose specified.

5. In a wrench, the combination with a shank having relatively thick longitudinal edge-bars, and a relatively thin combined strain-sheet and rack-plate integral therewith and having in one of its sides a series of grooves formed with their curved rear walls intersecting the cross-sectional axis of the shank and dying out upon the surface of the strain-sheet to thereby form rack-teeth connecting and bracing the edge-bars in the direction of transverse strains; of a traveler mounted upon said shank and having a longitudinal bore corresponding in outline with the cross-sectional outline of the shank and having also a transverse opening communicating with said longitudinal bore, longitudinally-bored shoulders extending laterally of said traveler upon each side of said transverse opening, a worm mounted between said shoulders and in said transverse opening and adapted to mesh with the teeth of the rack whereby the force of the traveler is transmitted through the rack-teeth and the body of the strain-sheet to the wrench-shank and along the neutral axis of the same, substantially as described and for the purpose specified.

CHARLES E. BILLINGS.

Witnesses:
H. E. BILLINGS,
I. B. RENSHAW.