(No Model.) 3 Sheets—Sheet 1.

W. W. ENSIGN.

HEATING AND VENTILATING APPARATUS.

No. 525,807. Patented Sept. 11, 1894.

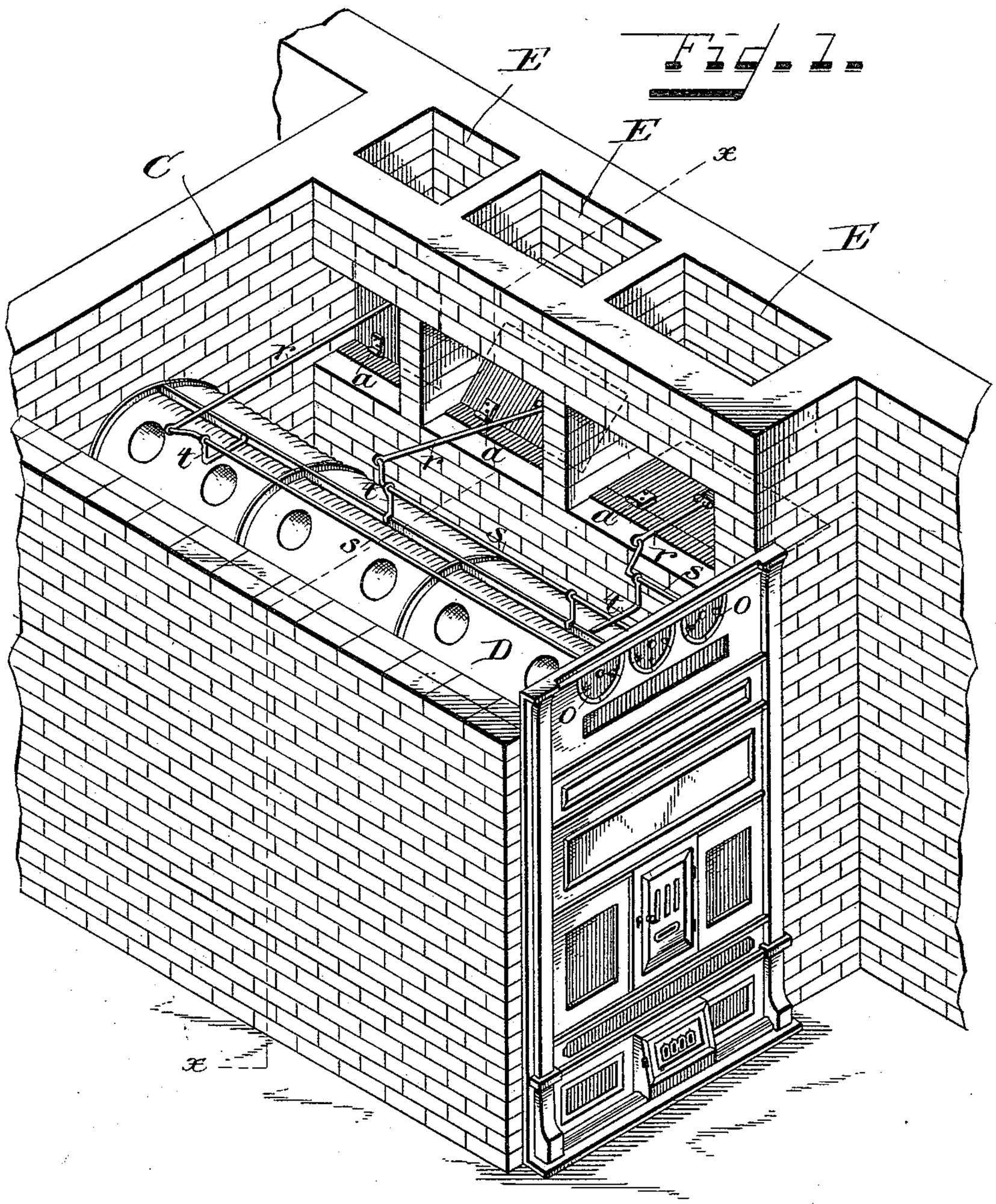

Witnesses.
J. Thomson Coxe
Bernard J. Mansfeld.

Inventor:
William W. Ensign
by Chas. M. Foster
his Attorney.

THE NORRIS PETERS CO., PHOTO-LITHO., WASHINGTON, D. C.

(No Model.) 3 Sheets—Sheet 2.

W. W. ENSIGN.

HEATING AND VENTILATING APPARATUS.

No. 525,807. Patented Sept. 11, 1894.

Fig. 2.

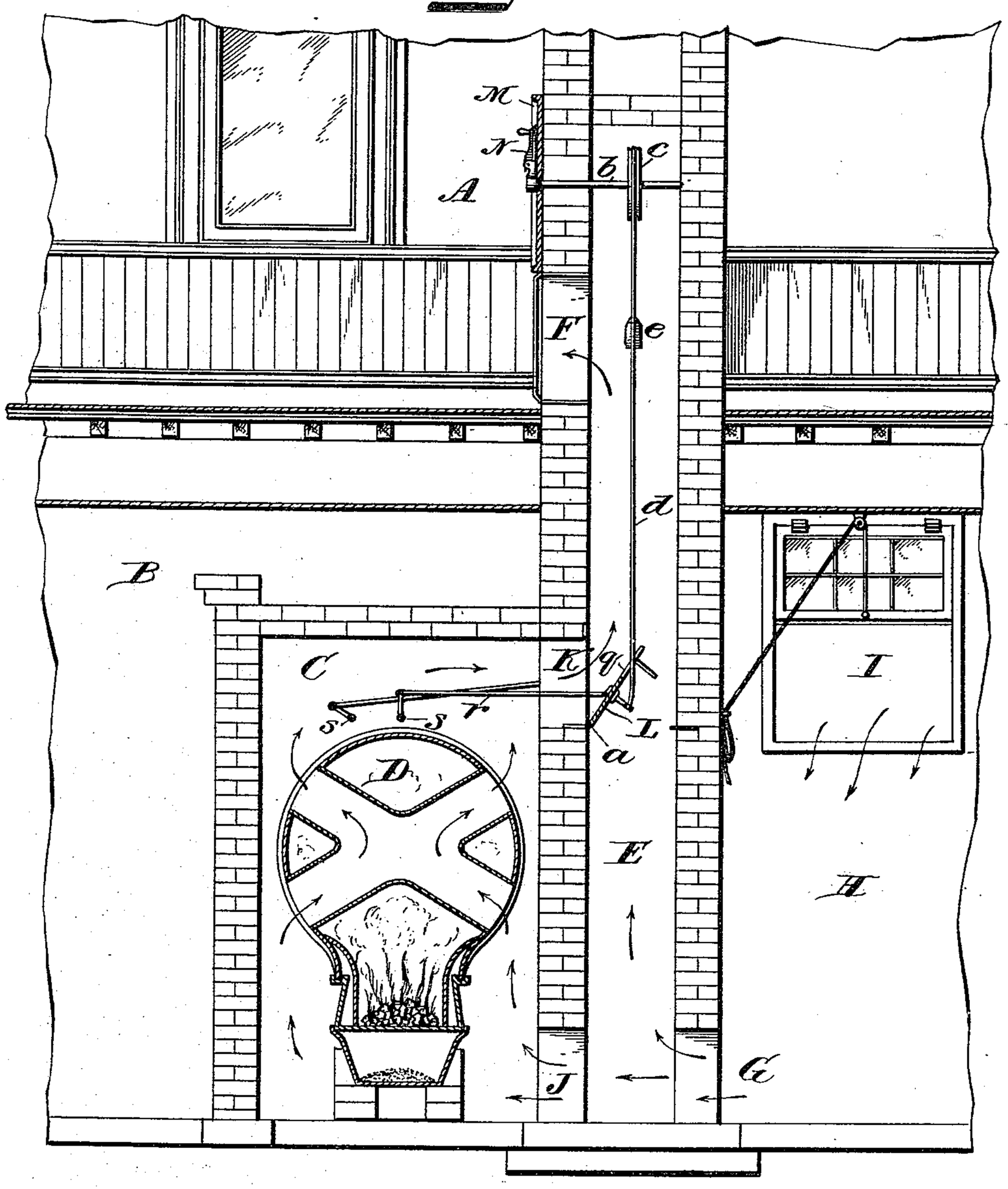

Witnesses.
J. Thomson Cross
Bernard J. S. Campbell

Inventor:
William W. Ensign
by Chas. M. Peck
his Attorney.

THE NORRIS PETERS CO., PHOTO-LITHO., WASHINGTON, D. C.

(No Model.) 3 Sheets—Sheet 3.

W. W. ENSIGN.

HEATING AND VENTILATING APPARATUS.

No. 525,807. Patented Sept. 11, 1894.

Fig. 3.

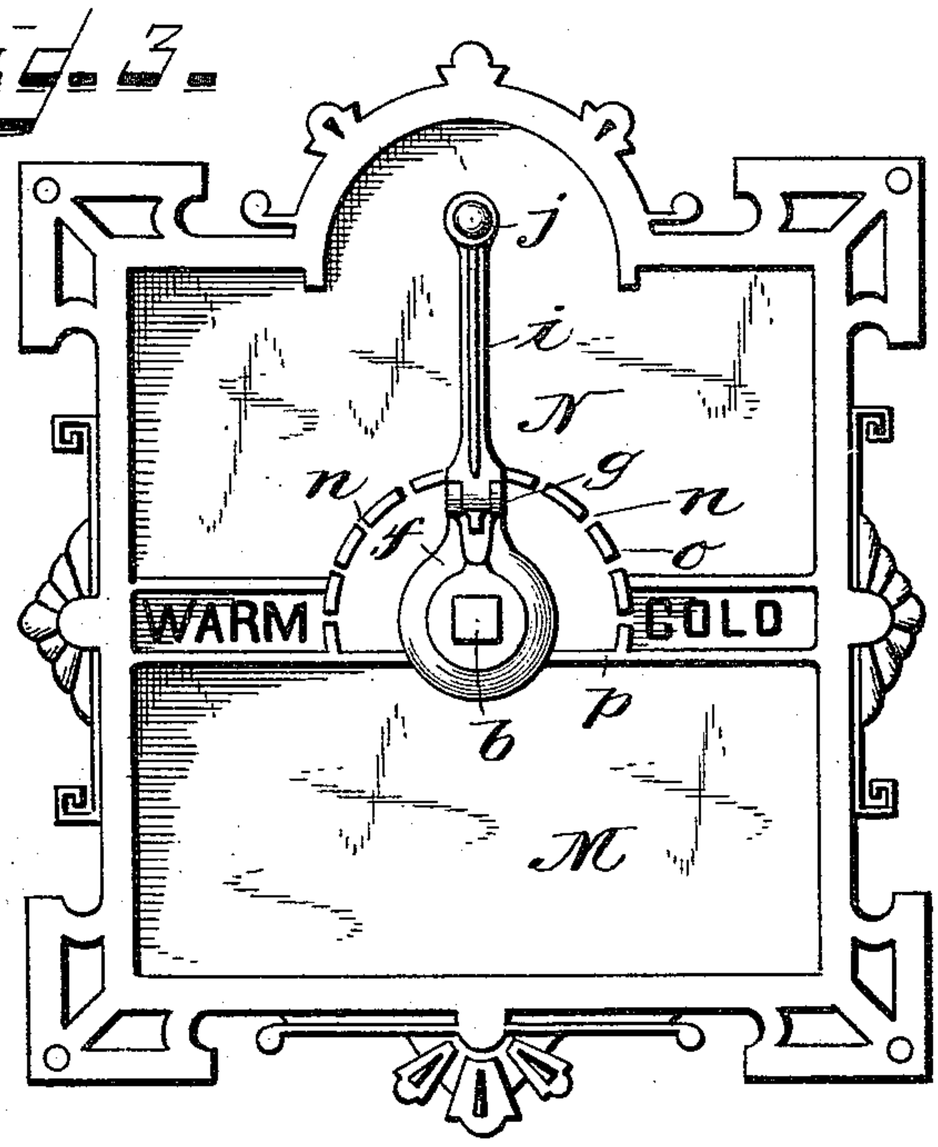

Fig. 4.

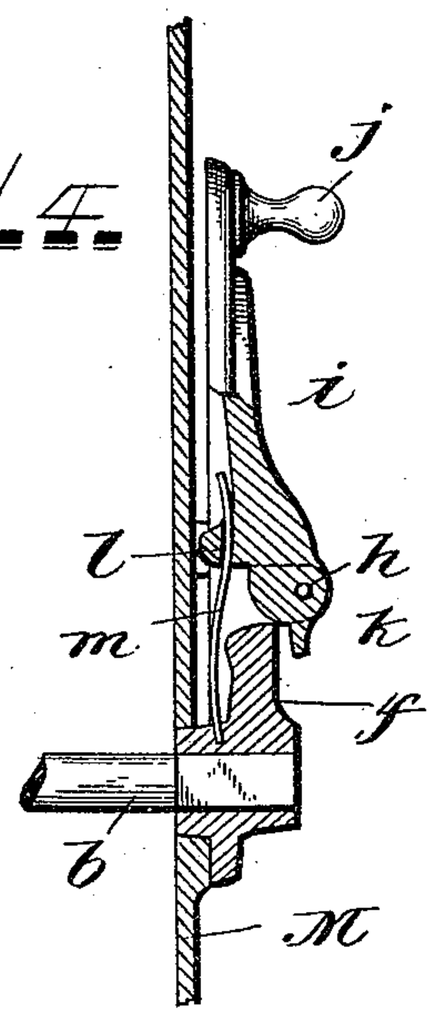

Fig. 5.

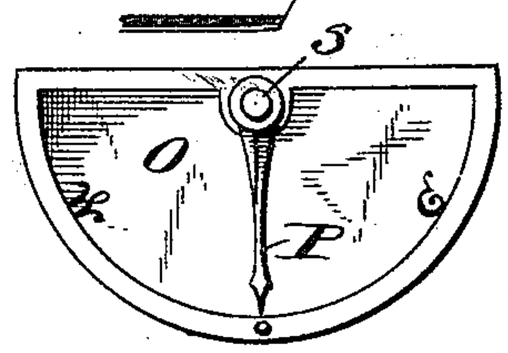

Fig. 6.

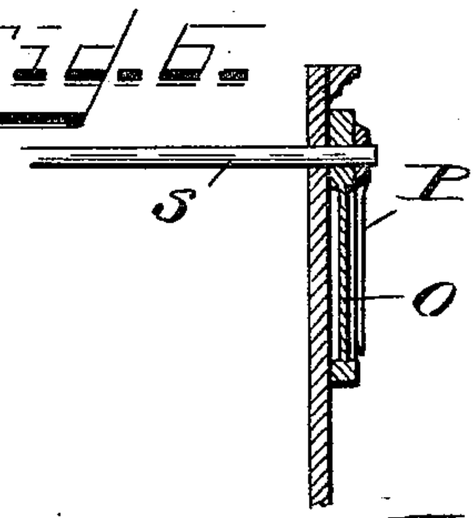

Witnesses.

J. Thomson Cross

Bernard J. Hauefeld.

Inventor:

William W. Ensign

by Chas. M. Peck

his Attorney.

THE NORRIS PETERS CO., PHOTO-LITHO., WASHINGTON, D. C.

UNITED STATES PATENT OFFICE.

WILLIAM W. ENSIGN, OF CINCINNATI, OHIO, ASSIGNOR TO THE PECK-WILLIAMSON HEATING AND VENTILATING COMPANY, OF SAME PLACE.

HEATING AND VENTILATING APPARATUS.

SPECIFICATION forming part of Letters Patent No. 525,807, dated September 11, 1894.

Application filed March 12, 1894. Serial No. 503,294. (No model.)

To all whom it may concern:

Be it known that I, WILLIAM W. ENSIGN, a citizen of the United States, residing at Cincinnati, in the county of Hamilton and State of Ohio, have invented certain new and useful Improvements in Heating and Ventilating Apparatus, of which the following is a full, clear, and exact description, reference being had to the accompanying drawings, forming part of this specification.

My invention relates to apparatus for hot air furnaces and its object is to supply air to the living rooms from the heating chamber of the furnace at the temperature desired, and also to indicate to the fireman at the furnace in what manner the air is being supplied to the living rooms to enable him to properly regulate the furnace at all times and without the necessity of going to the different living rooms.

The novelty of my invention will be hereinafter set forth and specifically pointed out in the claims.

In the accompanying drawings:—Figure 1, Sheet 1, is a perspective view of a furnace chamber and furnace supplied with my improved apparatus. Fig. 2, Sheet 2, is a sectional view on the dotted line *x—x* of Fig. 1, and carried up into the floor above. Fig. 3, Sheet 3, is an enlarged front elevation of the indicator plate and damper actuating handle for the living rooms. Fig. 4, Sheet 3, is a further enlarged sectional view of the damper handle on the dotted line *y—y* of Fig. 3. Fig. 5, Sheet 3, is an enlarged front elevation of one of the damper actuated indicators. Fig. 6, Sheet 3, is a sectional side elevation of the same on the dotted lines *z—z* of Fig. 5.

The same letters of reference are used to indicate identical parts in all the figures.

A represents a living room, for instance a class room in a school building; B, the furnace room containing the heating chamber C and inclosed furnace D therein of the usual or any suitable construction.

Air flues E extend from the bottom of the heating chamber up beside the same and up to the different floors of the building where registers F, Fig. 2, of any suitable construction open, at or near the floor, into the same. At the bottom of each flue E there is an opening G for the introduction of cold air taken in this instance from a cold air room H provided with a window I that can be opened or closed to any extent desired. Directly opposite each opening G there is a corresponding opening J into the heating chamber to supply air thereto, and at the top of the heating chamber there is an opening K into each flue E and these openings are of the same shape and width as the interior cross section of the flue, both, in this instance, being rectangular.

Hinged in each opening K, as at *a*, is a flat metal valve or damper L of such area as to completely close the flue E below it when lowered to a horizontal position. To operate these dampers from the living rooms above, I journal in each flue, just above its register F, a shaft *b* having fast thereon, within the flue a grooved sheave *c* around which is passed a wire cable or chain *d*, the lower end of which is secured to a projecting lug and counterweight *e* on the under side of the damper at or near its middle, and the upper end of which, on the opposite side of the sheave, has attached to it a weight *e* like a sash balance to counterbalance the weight of the damper. The chain or cable is made fast to the sheave at one point, and the diameter of the sheave is such that its half revolution will permit the damper to drop from a vertical position to a horizontal one. The front end of the shaft *b* projects through the wall of the living room and through an indicator plate M secured thereon, just above the register. Upon the projecting end of the shaft *b* is secured an operating and locking handle N, Figs. 2, 3 and 4, composed of a hub portion *f* fast to the shaft and having a projection with perforated ears *g* between which is pivoted as at *h*, an arm *i*, with finger knob *j*, forming the continuation of the handle. Just beneath the pivotal point of the arm *i* is a toe *k* for limiting the outward movement of the arm by coming in contact with the portion *f*, and upon the inner side of the arm *i* is a lug *l* through a perforation in which is passed the free end of a spring *m* whose opposite end is made fast in the hub portion *f*. The lug *l*, under the action of the spring *m*, is engaged in any one of a series of notches *n* in a segment rib *o* upon the indicator plate. The

handle is limited to play in a half circle on the upper side of the indicator plate by projections on the portion *f* coming in contact with ribs or stops *p* on the indicator plate. On one side of the indicator plate in line with the shaft *b* is the word "Warm" and on the opposite side the word "Cold."

When the handle is vertical as in Figs. 2, 3 and 4, the damper is in the position shown in Fig. 2, taking part of the warm air from the heating chamber of the furnace, and part of the cold air from the bottom of the flue E. When the handle is turned to the left, by drawing out its knob *j*, and disengaging the lug *l* from its notch *n*, and then turning the handle to a horizontal position, the damper will be lowered to a horizontal position closing the lower part of the flue E and taking all warm air from the heating chamber; and when it is turned to a horizontal position to the right, the damper will be raised to a vertical position, closing the opening K entirely and taking all cold air from the flue E, as will be readily understood. The notches *n* serve to lock the handle and damper in any of their adjusted positions, and a slot *q*, Fig. 2 is cut in the damper for the passage of the chain or cable *d* through the same to the attaching lug *e*.

The above fully illustrates and describes my damper actuating mechanism by which the teacher or occupant of the living rooms can regulate at will the temperature of said rooms, and I will now describe the mechanism at the furnace for indicating to the fireman or janitor the positions of the respective dampers, so that he may be enabled from the furnace room to regulate the furnace intelligently, for, if he could see at a glance that all the dampers were in vertical position and no warm air was being taken from the heating chamber he would know that a moderate fire only was needed, but, on the other hand, if he saw that all were in a horizontal position he would know that all warm air was being taken from the heating chamber and that a constant brisk fire was required. In the same way, if part were up and part were down he would known from experience how to regulate the fire.

Referring more particularly to Figs. 1, 5, and 6, this indicating mechanism may be thus described: Hinged at or near its middle to each damper L and extending into the heating chamber, is an arm or rod *r* whose inner end is pivoted to a crank arm on a shaft *s* journaled in a bracket support *t* and through the front of the furnace and a series of semicircular indicator plates O, thereon, bearing the initials "W" and "C" ninety degrees apart. On the projecting end of each shaft *s*, is made fast a pointer P just in front of the indicator plates, and the adjustment of the parts is such that when the damper is in a horizontal position, the pointer P, actuated by that damper, is turned to point to "W" indicating that all warm air is being taken; and when the damper is in a vertical position, its pointer P is turned to point to "C," indicating that all cold air is being taken, and when the damper is in the position of Fig. 2, the pointer of that damper is in a vertical position or half way between "W" and "C," as will be readily understood.

While I have shown the heating chamber as provided with a furnace, it is to be understood that my invention is not restricted to the means of supplying heat to the heating chamber, as this might be done by steam coils or hot air pipes located in said heating chamber and supplied with steam or hot water from a convenient source of supply.

Having thus fully described my invention, I claim—

1. In a heating and ventilating apparatus, the combination with a living room to be heated and a flue for supplying warm air thereto, of a heating chamber opening into said flue, a damper in said flue at the heating chamber opening, means in the living room for actuating the said damper, an indicator at the furnace, and connections between said damper and indicator whereby the position of the latter will be changed as the position of the former is varied.

2. In heating and ventilating apparatus, the combination of the heating chamber C, flue E having an opening at its lower end for a source of cold air supply and an opening K into the heating chamber, said flue extending to a register in a living room, a damper in said flue at the opening K, means in the living room for actuating the damper, rod *r* pivotally connected to said damper and at its opposite end to a rock shaft *s* in the heating chamber in such manner that the swinging of the damper rocks the shaft, indicator plate O at the furnace, and pointer P on the rock shaft in front of the indicator plate, substantially as described.

3. In heating and ventilating apparatus, the combination of the heating chamber C, flue E having an opening at its lower end from a source of cold air supply, and an opening K into the heating chamber, said flue extending to a register in a living room, a damper in said flue at the opening K, indicator plate M at said register provided with an operating handle N, shaft *b* in said flue to which handle N is connected, sheave *c* on said shaft, chain or cable *d* connecting said sheave and damper, rod *r* pivotally connected to said damper and at its opposite end to a rock shaft *s* in the heating chamber in such manner that the swinging of the damper rocks the shaft, indicator plate O at the furnace, and pointer P on the rock shaft in front of the indicator plate, substantially as described.

WILLIAM W. ENSIGN.

Witnesses:
J. THOMSON CROSS,
BERNARD J. HAUSFELD.