(No Model.)

T. CRANEY.

ELECTROLYTIC CELL.

No. 504,774. Patented Sept. 12, 1893.

Fig. 1.

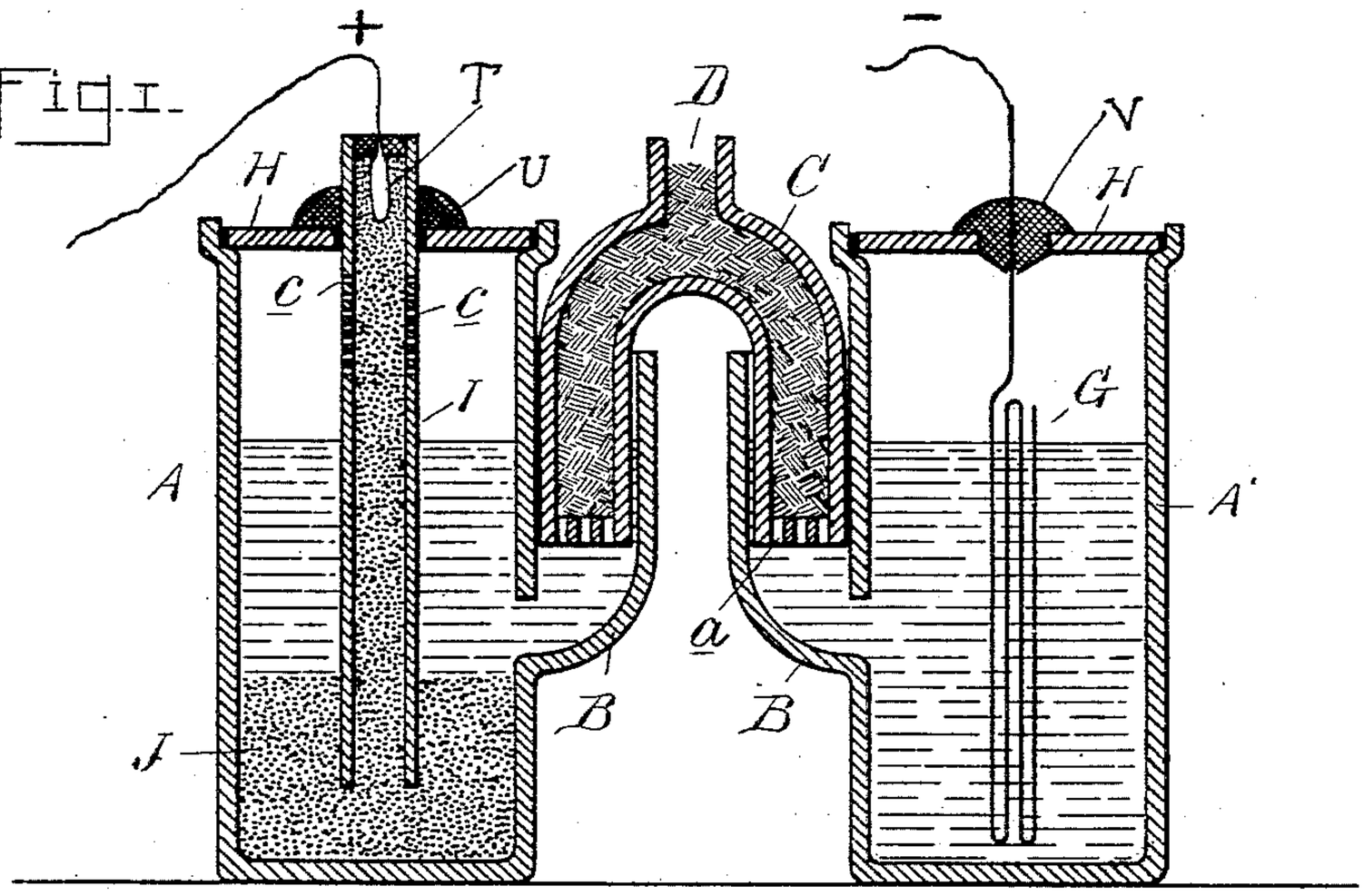

Fig. 4.

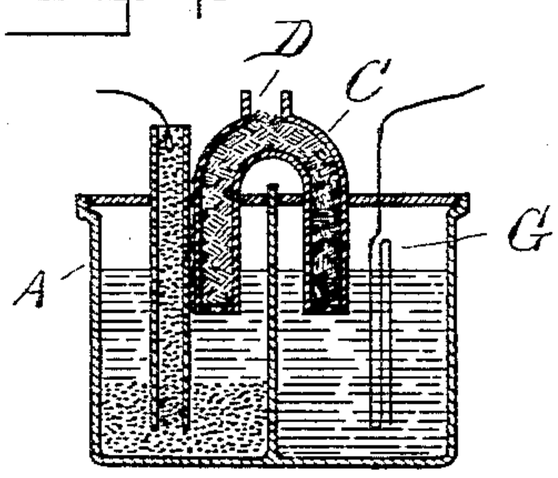

Fig. 3.

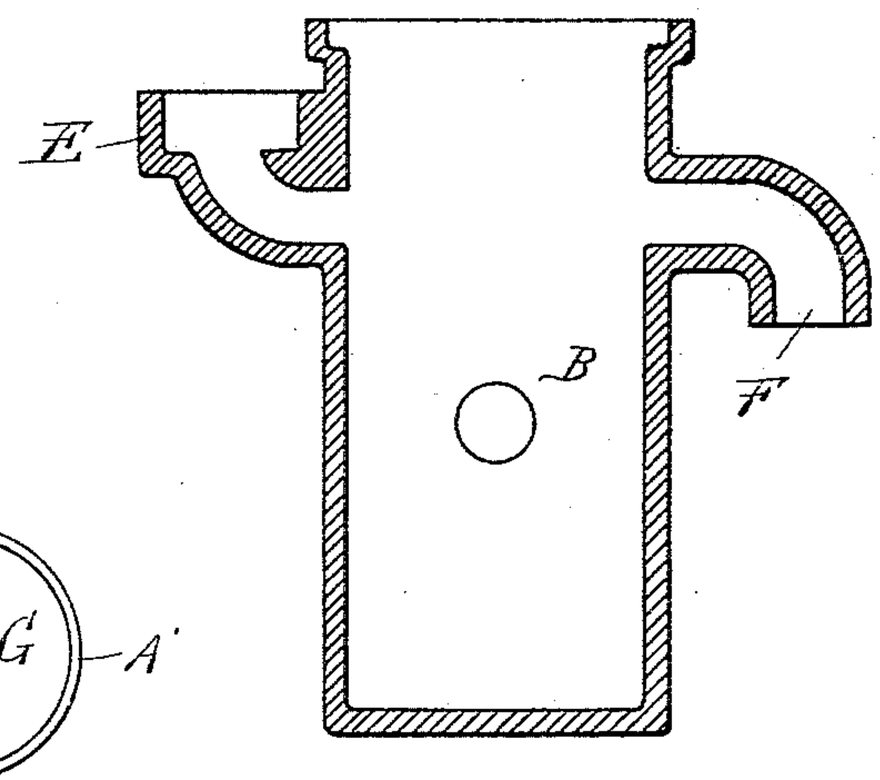

Fig. 2.

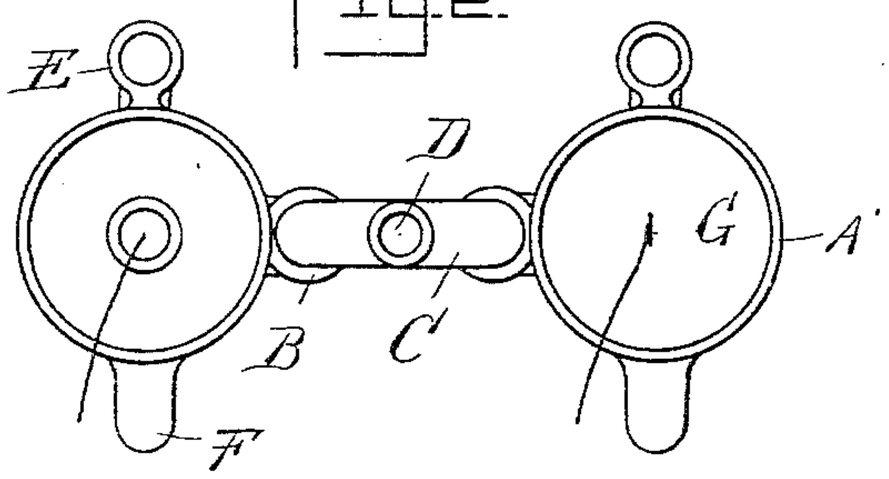

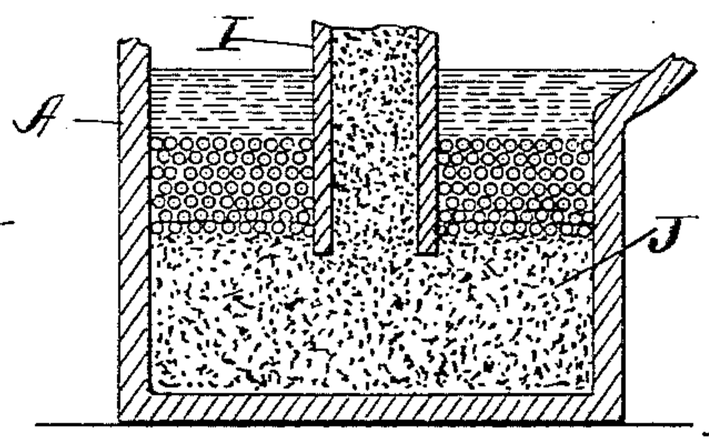

Fig 5

Witnesses,
Otto F. Barthel,
M. B. O'Gorherty.

Inventor,
Thomas Craney,
By Mos Sprague Jr
Atty's

UNITED STATES PATENT OFFICE.

THOMAS CRANEY, OF BAY CITY, MICHIGAN.

ELECTROLYTIC CELL.

SPECIFICATION forming part of Letters Patent No. 504,774, dated September 12, 1893.

Application filed February 13, 1893. Serial No. 462,113. (No model.)

To all whom it may concern:

Be it known that I, THOMAS CRANEY, a citizen of the United States, residing at Bay City, in the county of Bay and State of Michigan, have invented certain new and useful Improvements in Electrolytic Cells, of which the following is a specification, reference being had therein to the accompanying drawings.

This invention relates more specifically to the construction of electrolytic cells for the commercial electrolysis of chlorides, such as chloride of sodium for making chlorine and caustic soda. The electrolysis of chlorides, such as chloride of sodium is a delicate and difficult matter and the progress of commercial electrolysis in this particular field has met with many obstacles. This arises largely from the presence of chlorine, the intense chemical action of which results in the formation of hypochlorites, which are especially destructive to the anode. Carbon, which is the most available material for the anode is not exempt from this destructive action, and thus, while it cannot be avoided I propose to construct the cell and carbon anode in such a manner that the destructive action is limited and made harmless so that the permanency and efficiency of the cell are not impaired.

To this end my invention consists in the peculiar construction of the cell all as more fully hereinafter described and shown in the accompanying drawings, in which—

Figure 1 is a vertical central section through the anode and cathode compartments of an electrolytic cell containing an anode of my improved construction. Fig. 2 is a plan of the cell. Fig. 3 is a detached vertical section of one of the two like vessels of the cell, the section being taken at right angles to Fig. 1. Fig. 4 is a similar view to Fig. 1 with the diaphragm differently arranged. Fig. 5 is a cross section through the anode compartment, the same as shown in Fig. 1, embodying a modification specifically referred to.

A A′ represent two like vessels or jars forming respectively the anode and cathode compartments of an electrolytic cell. Each vessel is formed with a lateral branch B, which branches form sockets for the ends of the bent tube C supported and suitably sealed therein. This tube is filled with a porous medium adapted to form an electrolytic diaphragm, such as asbestus. To hold the material in place in the tube, the latter has its lower ends closed and provided with perforations *a* and an opening D is formed in the top of the tube. Each vessel is also provided with the lateral branches E F arranged to form suitable inlet and outlet connections for feeding and discharging the liquid or solution to be electrolyzed and for the escape of any gaseous products.

The cathode G shown in the vessel A may be of any known construction. It is supported in position in the cathode compartment by a suitable cover H which may be sealed by means of cement V in the vessel. I have shown the cathode as formed from a piece of sheet metal doubled upon itself.

The construction of the anode is as follows: I use an open ended tube I of non-porous indestructible material and which forms a non-conductor (such as vitrified clay, stoneware or porcelain). This tube I fill with powdered gas carbon or other dense form of pure carbon, packed in finely so as to make it a homogeneous carbon body, and if desired it may be baked in the tube, all for the purpose of making it a good conductor. The positive terminal from the electric source of supply is carefully embedded in this carbon and its contact with the carbon is preferably made more perfect by a metallic enlargement T of the wire terminal. The tube I is preferably sealed as at U in the cover H and is of suitable length to extend with its upper end above the vessel and with its lower end to or near the bottom thereof. The lower end of the tube is embedded in a body of carbon J which fills the entire vessel from the bottom up to about the point where the lateral branch B connects, and is preferably of powdered carbon packed tightly around the tube I so as to make good electrical connection with the carbon in the tube and exclude the liquid from any access thereto.

In practice the parts being arranged and constructed as described, the anode compartment is filled with the liquid or solution to be decomposed up to the height of the outflow F and the cathode compartment is filled to the same height either with the solution or with water alone or with a weak solution of the product to be obtained. The tube C is

made effective as an electrolytic diaphragm by absorbing the liquid from the compartments by capillary attraction or some solution may be poured into the opening D so that the medium in the tube will absorb it. Electrolytic action can now take place and as the solution in the anode compartment becomes exhausted fresh solution may be added through the inlet E, whereby the exhausted solution is displaced through the outlet F.

The product in the cathode compartment may be obtained in the same manner by causing it to overflow through the outlet F by the addition of fresh solution or water through the inlet E and suitable supply and receiving tanks may be permanently provided for the purpose. The gaseous products may readily be carried off through one of the two connections E F of each compartment and be separately collected if desired. My apparatus is thus adapted for continuous operation and the permanency of the anode is insured as the disintegration of the carbon is now mainly confined to the surface portion of the body J, where it is of no consequence.

It is well known that it is mechanically difficult to make good carbon contacts, but by compacting the carbon directly into the lower part of the vessel A it is firmly held in position and cannot become displaced while at the same time the tube I is firmly held in place. Thus the electrical contact between the carbon in the tube and the carbon in the vessel if once properly made is not likely to be broken. By keeping the liquid out of the tube the wire terminal is also kept from corroding, but as an additional safe guard the tube I is preferably provided with small perforations *c* above the liquid so that if by chance some gaseous product such as chlorine should find its way into the tube or be formed therein it can escape into the space above the liquid, thus preventing it from forcing its way up to the wire terminal which would otherwise be soon corroded.

The upper layer or layers of the carbon body J may be formed if desired of coarser particles of carbon, so as to make them permeable to the liquid and thus reduce the electrical resistance, as shown in Fig. 5.

In the modification shown in Fig. 4, the diaphragm C projects with its lower ends directly into the vessel A. This renders the lateral branches G unnecessary and a single vessel divided into two separate compartments may be used instead of two separate vessels.

I consider a capillary form of diaphragm especially adapted to accomplish the full object of my invention as it keeps the liquids in the two compartments better separated than a mere partition, as in case it breaks down the liquids remain separated; it has also the advantage of being easily renewed, or removed if it is desired to renew the anode and with a view to the latter contingency the carbon body J may be formed separately in a mold of the proper dimensions and baked solid with the tube I secured in place therein, so that the old anode can be removed and a new one put in place without much trouble or delay.

What I claim as my invention is—

1. The combination in an electrolytic cell having separate anode and cathode compartments united by an electrolytic diaphragm, of an anode composed of carbon compacted within a protective tube or casing extending through the liquid of the compartment, and carbon compacted into the bottom portion of the anode compartment itself and around the lower end of said tube or casing, and extending to the walls thereof, substantially as described.

In testimony whereof I affix my signature in presence of two witnesses.

THOMAS CRANEY.

Witnesses:
M. B. O'DOGHERTY,
N. L. LINDOP.