(No Model.)

T. MORRIS.

STOP HINGE FOR DESKS.

No. 498,564. Patented May 30, 1893.

Fig. 1.

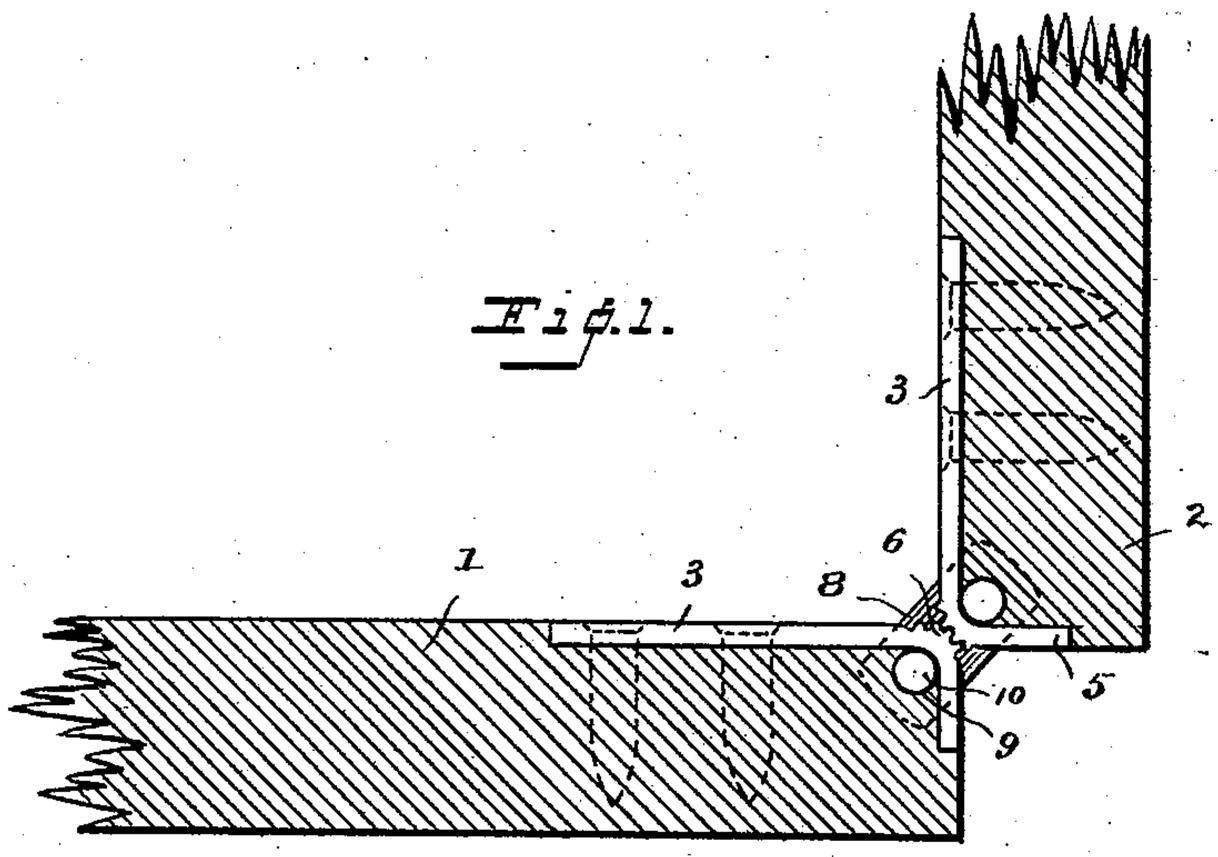

Fig. 2.

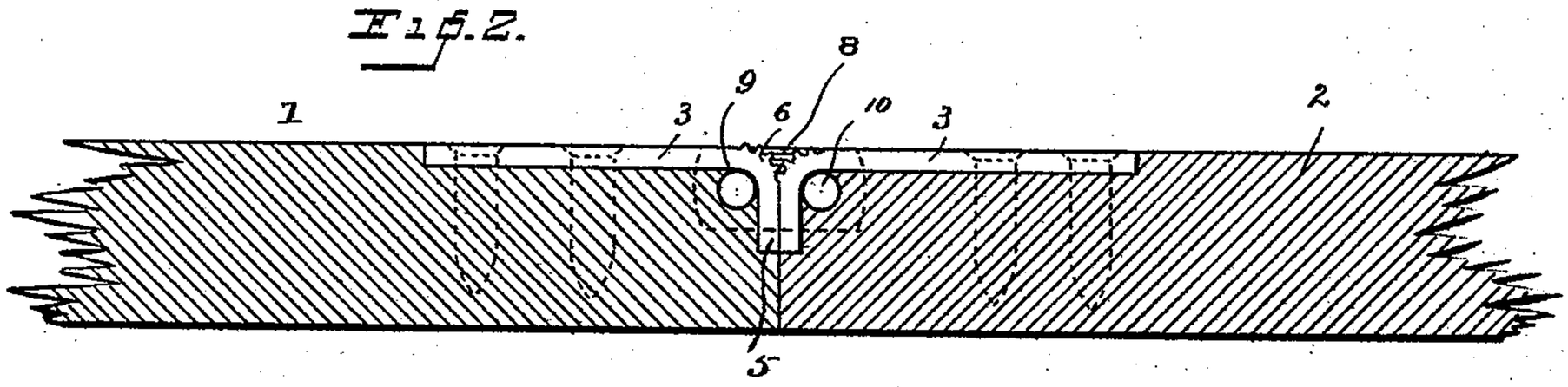

Fig. 3.

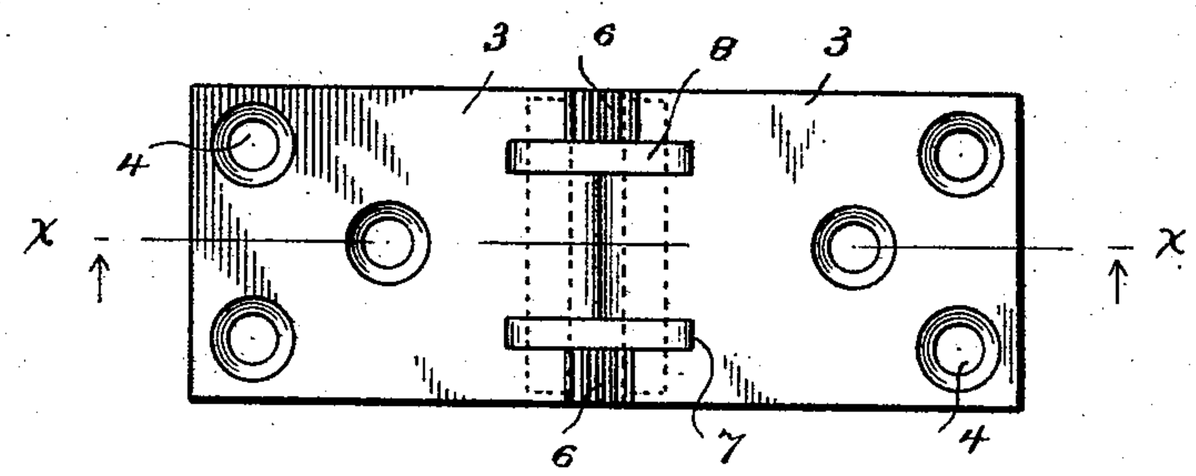

Fig. 4.

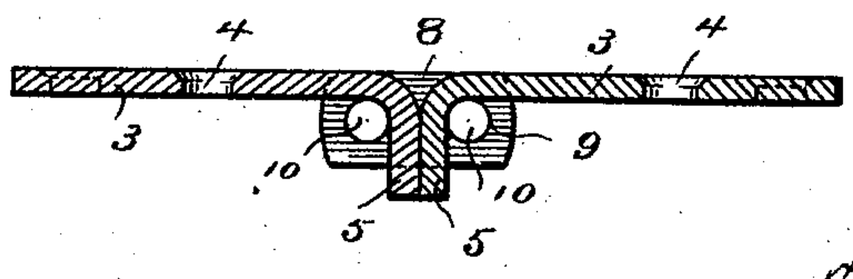

WITNESSES:

C. M. Newman,

Mattie R. Davis.

INVENTOR:

Thomas Morris

BY

A. M. Wooster

ATTORNEY

THE NORRIS PETERS CO., PHOTO-LITHO., WASHINGTON, D. C.

UNITED STATES PATENT OFFICE.

THOMAS MORRIS, OF BROOKLYN, ASSIGNOR TO JULIUS BERBECKER & CO., OF NEW YORK, N. Y.

STOP-HINGE FOR DESKS.

SPECIFICATION forming part of Letters Patent No. 498,564, dated May 30, 1893.

Application filed June 20, 1892. Serial No. 437,257. (No model.)

To all whom it may concern:

Be it known that I, THOMAS MORRIS, a citizen of the United States, residing at Brooklyn, in the county of Kings and State of New York, have invented certain new and useful Improvements in Stop-Hinges for Desks; and I do hereby declare the following to be a full, clear, and exact description of the invention, such as will enable others skilled in the art to which it appertains to make and use the same.

My invention has for its object to produce a hinge of this class which shall be simple and economical in cost, easily attached, strong and durable, the hinge being so constructed that when the folding leaf is used as a writing desk the surface shall be level, there being no knuckles or other parts projecting above the surface of the table or leaf, and the entire strain shall be upon the hinge and not upon the screws by which it is attached, the hinge being specially constructed to stand strain without injury. In order to produce a hinge of this class which will meet the requirements of the trade, I have devised the novel construction which I will now describe referring by numbers to the accompanying drawings forming part of this specification in which—

Figure 1 is a section through the table and swinging leaf of a secretary or writing desk, the hinge appearing in edge view and the leaf being partially swung over; Fig. 2, a similar view the leaf being swung over ready for use as a writing table; Fig. 3, a plan view of the hinge detached, and Fig. 4 is a section on the line *x x* in Fig. 3.

1 denotes the table of an ordinary secretary or writing desk and 2 the folding leaf.

3 denotes the plates of the hinge which are provided with screw holes 4 for attachment in place and with angle pieces 5 which lie at a right angle to the plates of the hinge and are adapted to bear against each other when the leaf is open as clearly shown in Fig. 2. The corners where the angle pieces join the plates of the hinge are rounded as shown in Fig. 2 and the outer edges of both plates at the corners are provided with gear teeth 6 which are pressed into the metal when the plates and angle pieces are formed.

7 denotes slots in the corners at the intersection of the plates of the hinge and the angle pieces, and 8 metallic straps or links lying in said slots. The straps or links are provided with transverse holes 9 which are in line with each other and which receive pintles 10, said pintles being retained in said holes by a drive fit or in any suitable manner.

The operation of my novel hinge will be clearly understood from the drawings. The two plates are locked together by the pintles driven through the holes in the straps said pintles lying on the inner sides of the angles formed by the plates and angle pieces. The gear teeth at the corners mesh with each other and prevent the two plates of the hinge from slipping in opening or closing the swinging leaf. These gear teeth are an important feature of construction as they render the operation of the hinge just as smooth and regular as the operation of an ordinary knuckle hinge. These gear teeth may or may not be extended entirely across the plates, that is between the two straps. I preferably form gear teeth at the edges of the plates only, as shown in the drawings as gear teeth at these points are quite sufficient to hold the plates from slipping in use. In opening and closing the hinge both the rounded and serrated portions of the edges of the plates are constantly in engagement with each other, there being no opening between the plates of the hinge in any position in which they can be placed. In the open position as in Figs. 2 and 4 the angle pieces bear against each other and take up all the strain caused by using the leaf as a writing desk there being practically no strain whatever upon the screws by which the hinge is secured in place.

Having thus described my invention, I claim—

A flush stop hinge for desks consisting of two plates each of which is provided with an angle piece having a rounded corner, gear teeth at said corners which engage each other and slots in the angles, straps lying in said slots and provided with transverse holes and pintles engaging said holes and lying on the inner sides of the angles, so that in the open position the pintles and angle pieces will take up the strain rendering supports unnecessary.

In testimony whereof I affix my signature in presence of two witnesses.

THOMAS MORRIS.

Witnesses:

JOHN J. HENDERSON,

JULIUS BERBECKER.