(No Model.)

5 Sheets—Sheet 1.

R. S. ANDERSON.

ENVELOPE MACHINE.

No. 497,484.

Patented May 16, 1893.

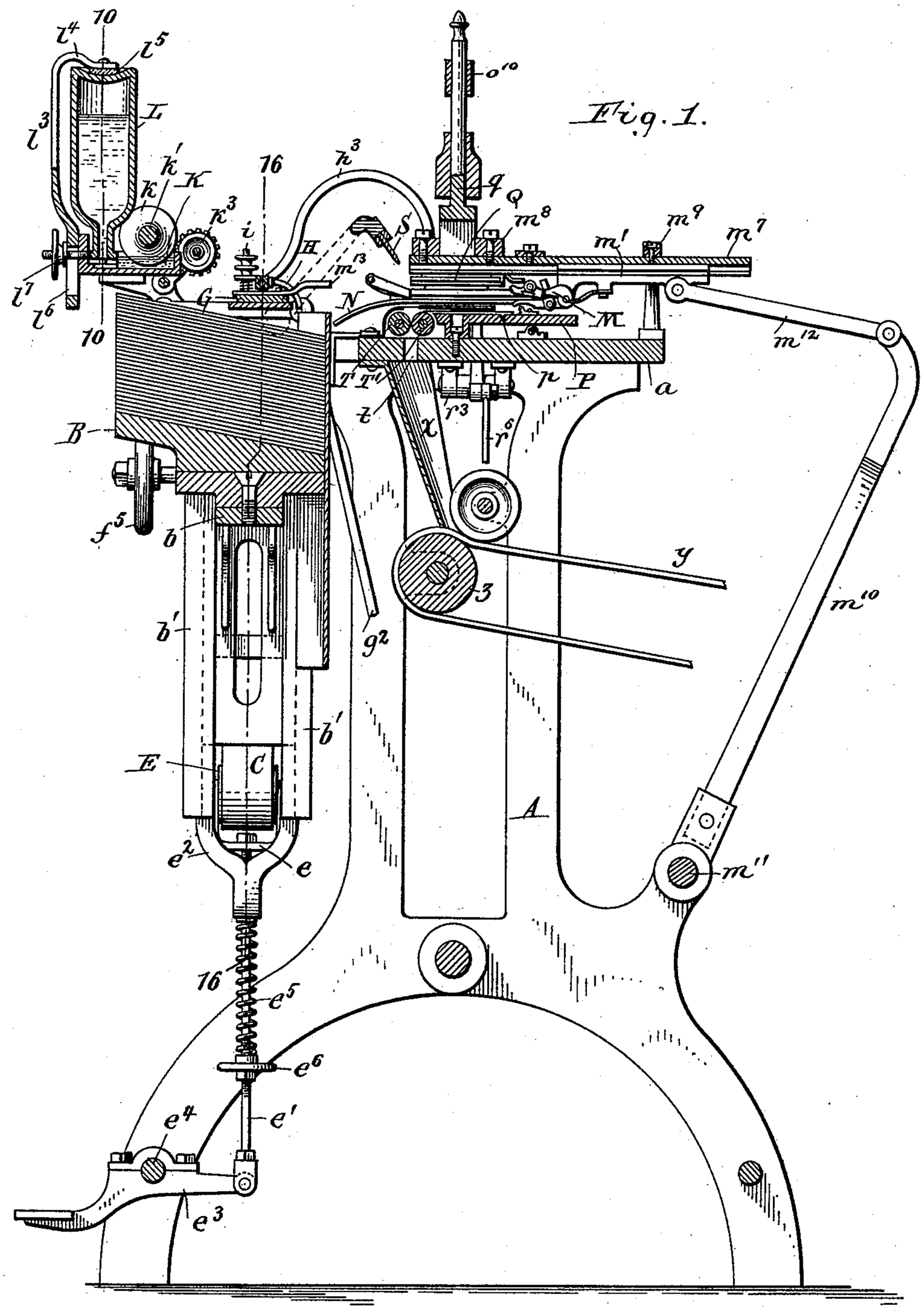

Witnesses:
Theo. L. Popp.
Chas. F. Burkhardt.

Robt. S. Anderson Inventor.
By Wilhelm Bonnd
Attorneys.

THE NORRIS PETERS CO., PHOTO-LITHO., WASHINGTON, D. C.

(No Model.) 5 Sheets—Sheet 2.

R. S. ANDERSON.

ENVELOPE MACHINE.

No. 497,484. Patented May 16, 1893.

Fig. 2.

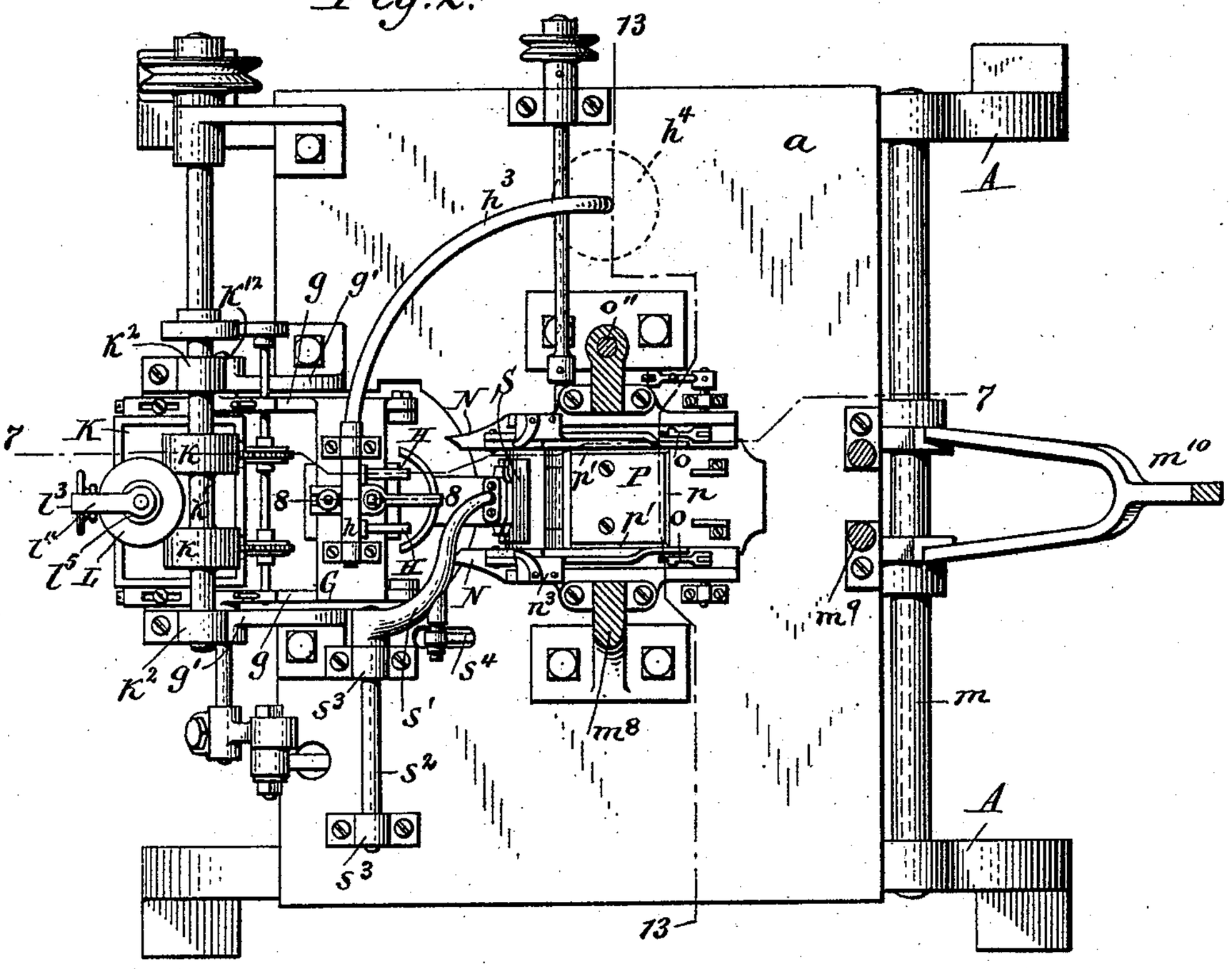

Fig. 3.

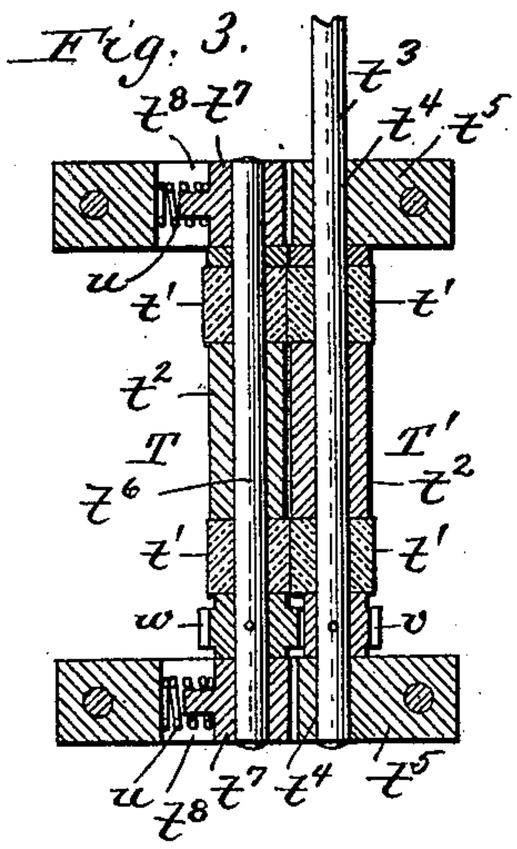

Fig. 4.

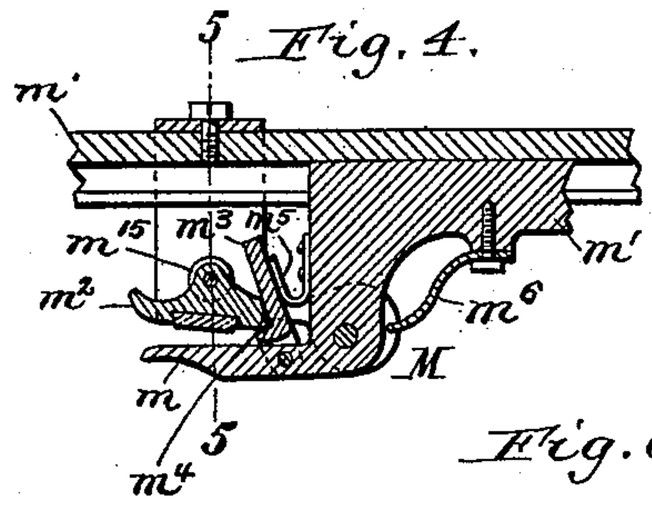

Fig. 5.

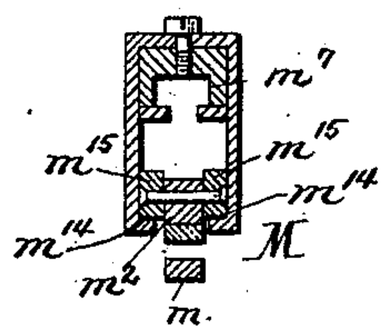

Fig. 6.

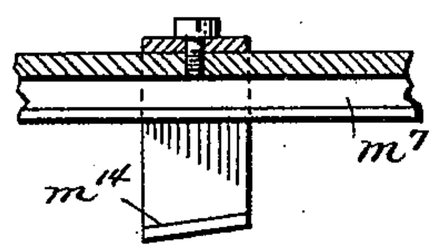

Witnesses:
Theo. L. Popp.
Chas. F. Burkhardt.

Robt. S. Anderson Inventor.
By Wilhelm Bonnet
Attorneys.

THE NORRIS PETERS CO., PHOTO-LITHO., WASHINGTON, D. C.

(No Model.) 5 Sheets—Sheet 3.

R. S. ANDERSON.

ENVELOPE MACHINE.

No. 497,484. Patented May 16, 1893.

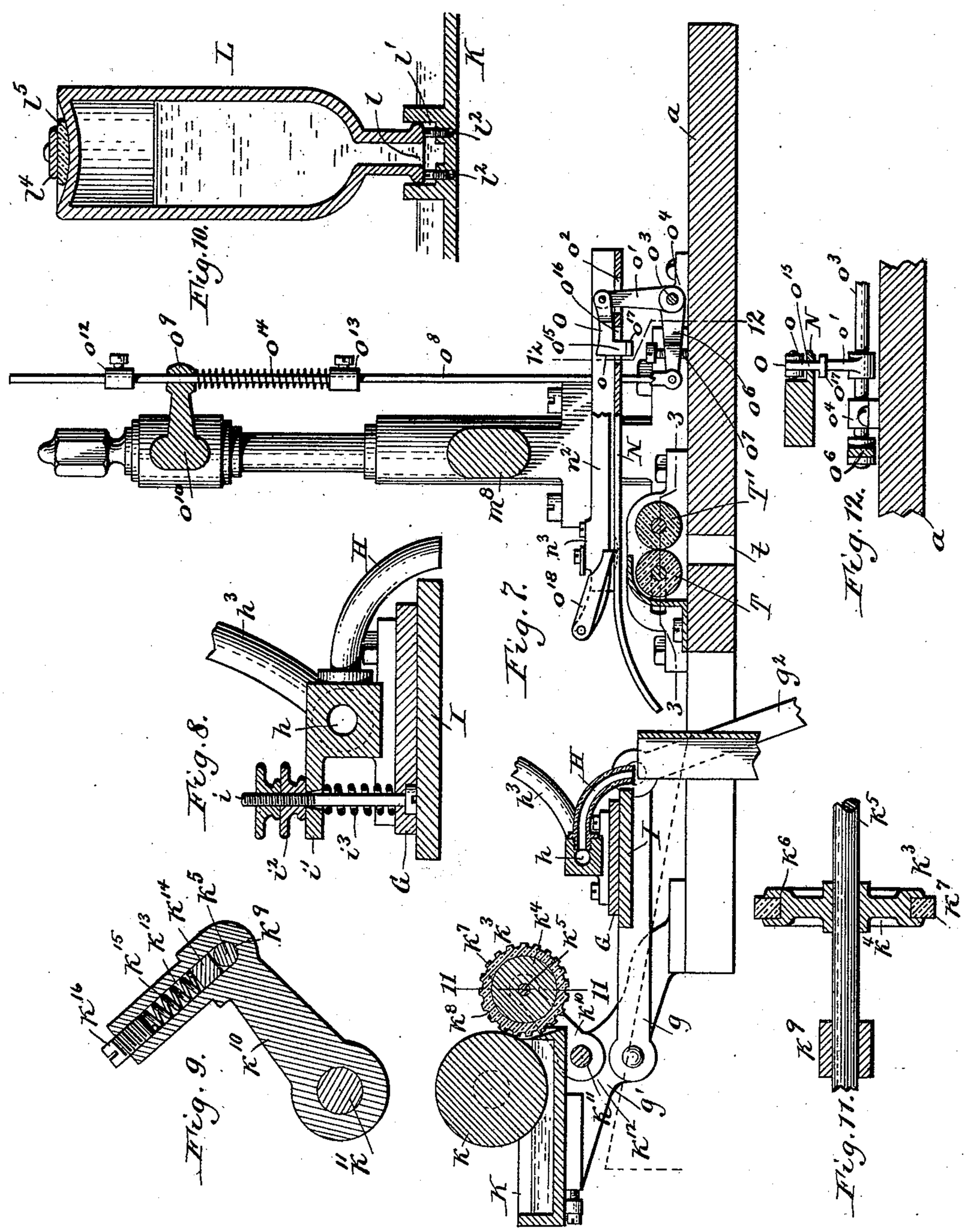

Witnesses:
Theo. L. Popp.
Chas. F. Burkhardt.

R. S. Anderson Inventor.
By Wilhelm Bonnet
Attorneys.

THE NORRIS PETERS CO., PHOTO-LITHO., WASHINGTON, D. C.

(No Model.)

5 Sheets—Sheet 4.

R. S. ANDERSON.

ENVELOPE MACHINE.

No. 497,484.

Patented May 16, 1893.

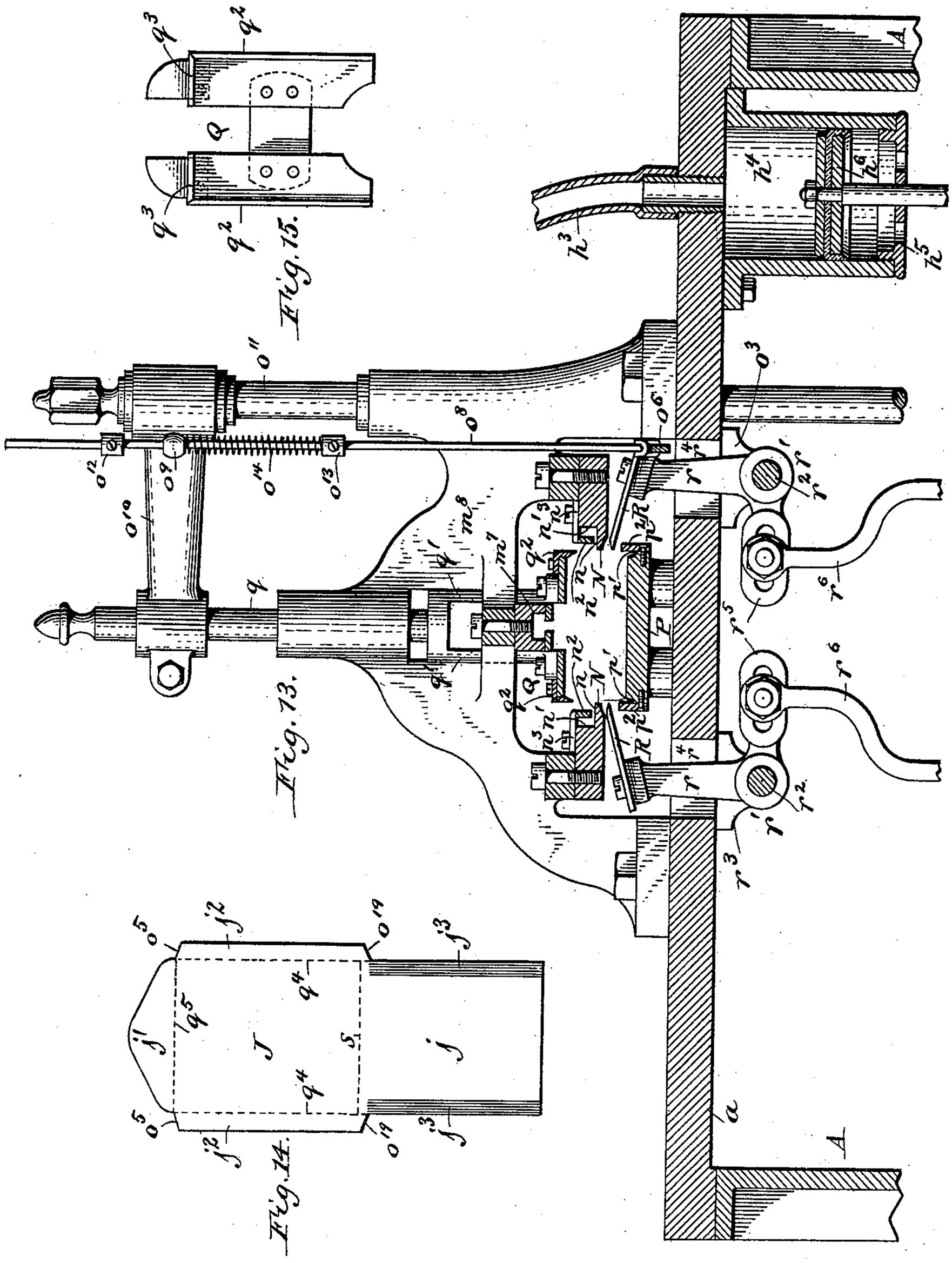

Witnesses:
Theo. L. Popp.
Chas. F. Burkhardt.

Robt. S. Anderson Inventor.
By Wilhelm Bonnet
Attorneys.

THE NORRIS PETERS CO., PHOTO-LITHO., WASHINGTON, D. C.

(No Model.) 5 Sheets—Sheet 5.

R. S. ANDERSON.

ENVELOPE MACHINE.

No. 497,484. Patented May 16, 1893.

Fig. 16.

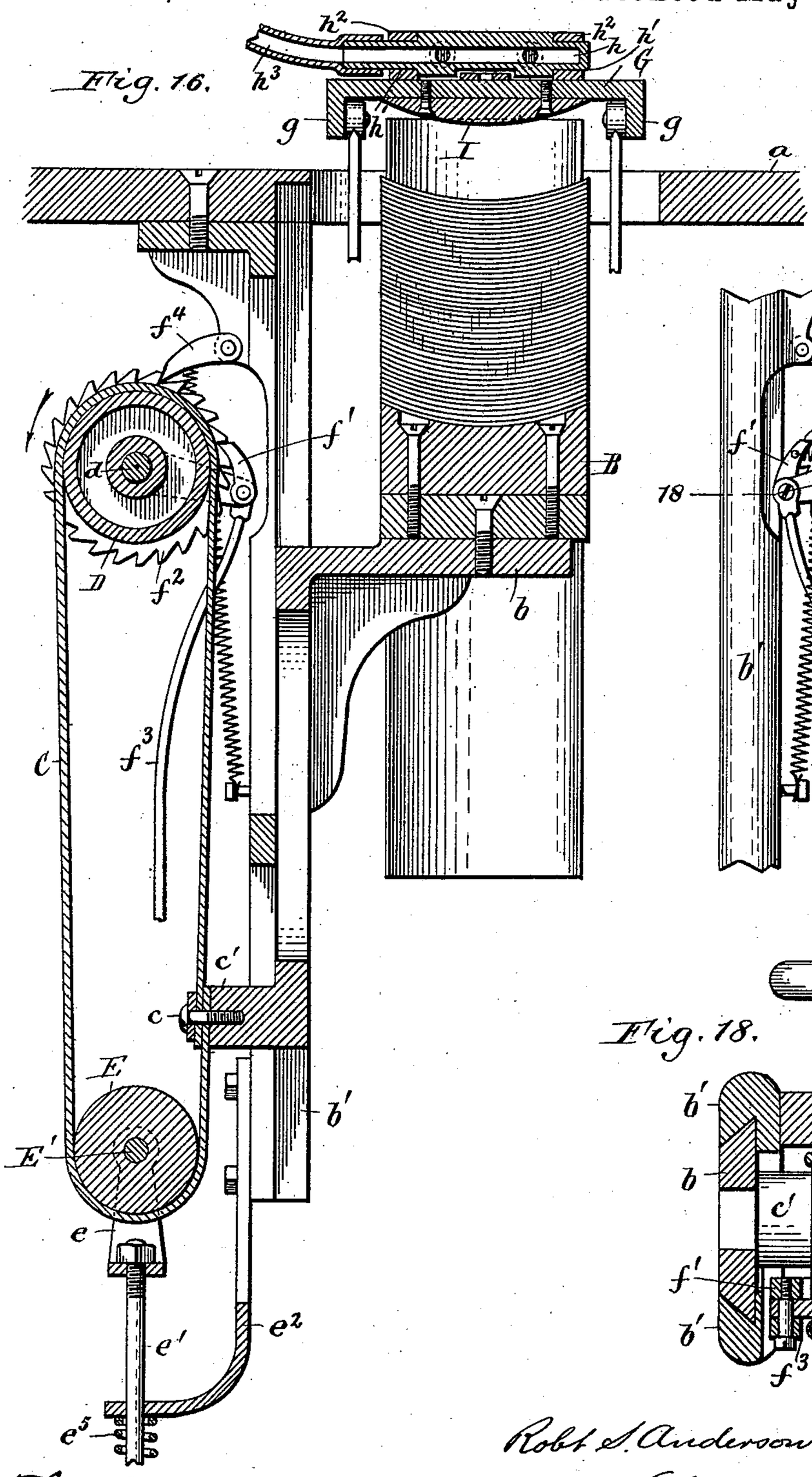

Fig. 17.

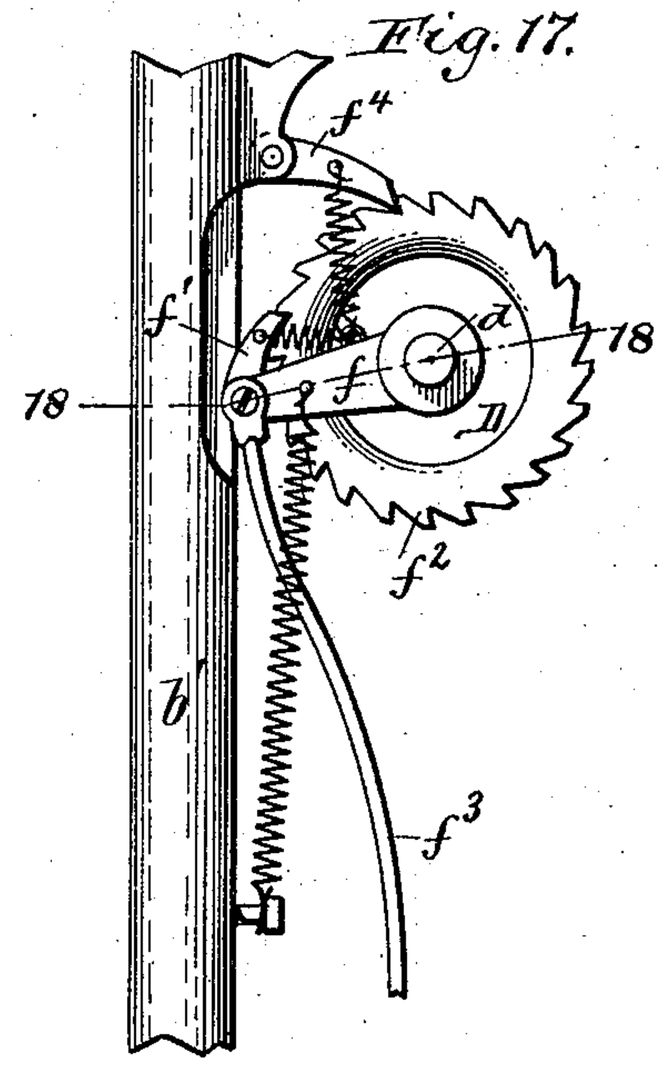

Fig. 18.

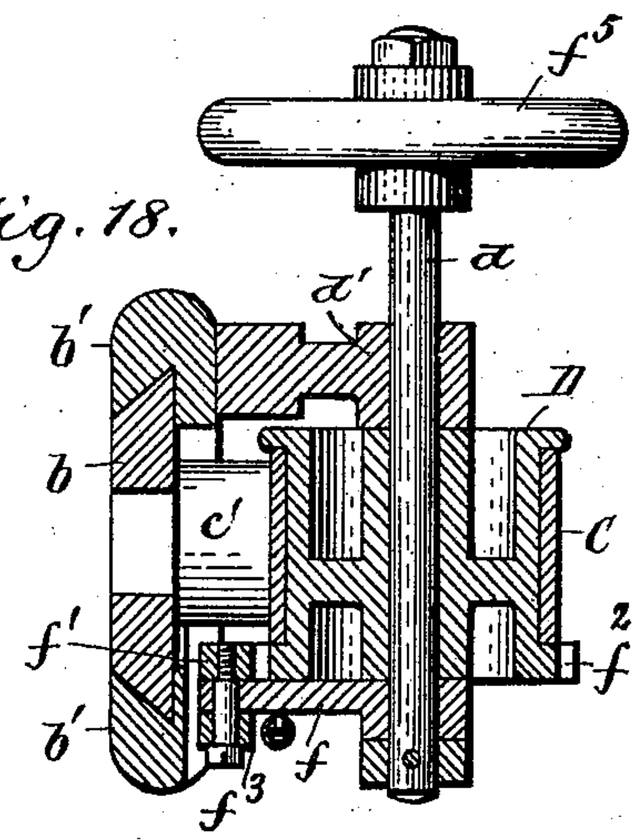

Robt S. Anderson Inventor.
By Wilhelm Bonnet.
Attorneys.

Theo. L. Popp
Chas. F. Burkhardt } Witnesses.

THE NORRIS PETERS CO., PHOTO-LITHO., WASHINGTON, D. C.

UNITED STATES PATENT OFFICE.

ROBERT S. ANDERSON, OF TORONTO, CANADA, ASSIGNOR OF ONE-HALF TO EDWARD W. BLACKHALL, OF SAME PLACE.

ENVELOPE-MACHINE.

SPECIFICATION forming part of Letters Patent No. 497,484, dated May 16, 1893.

Application filed November 8, 1892. Serial No. 451,396. (No model.)

To all whom it may concern:

Be it known that I, ROBERT S. ANDERSON, a subject of the Queen of Great Britain, residing at Toronto, in the county of York, in the Province of Ontario, Canada, have invented new and useful Improvements in Envelope-Machines, of which the following is a specification.

This invention relates to a machine for making paper bags or envelopes and has for its objects to improve the mechanism for elevating the feed table which supports the pile of blanks, and the devices for lifting the blanks from the pile; also to improve the means for gumming, creasing and folding the blanks.

In the accompanying drawings consisting of five sheets:—Figure 1 is a longitudinal sectional elevation of my improved machine. Fig. 2 is a sectional top plan view of the same. Fig. 3 is a horizontal section in line 3—3, Fig. 7. Fig. 4 is a fragmentary longitudinal section of the carrying gripper and connecting parts on an enlarged scale. Fig. 5 is a vertical transverse section in line 5—5, Fig. 4. Fig. 6 is a fragmentary section on an enlarged scale of the gripper guide and the cam for opening the gripper at the end of its forward stroke. Figs. 7 and 8 are longitudinal sections on an enlarged scale in lines 7—7, and 8—8, Fig. 2, respectively. Fig. 9 is a vertical longitudinal section, on an enlarged scale, of one of the rock arms supporting the gum rollers. Fig. 10 is a vertical transverse section, on an enlarged scale, in line 10—10, Fig. 1. Figs. 11 and 12 are vertical transverse sections in lines 11—11 and 12—12, Fig. 7, respectively. Fig. 13 is a vertical transverse section, on an enlarged scale, in line 13—13, Fig. 2. Fig. 14 is a plan view of one of the unfolded blanks from which a bag is made. Fig. 15 is a bottom plan view of the plunger for creasing the blanks. Fig. 16 is a vertical transverse section, on an enlarged scale, in line 16—16, Fig. 1. Fig. 17 is a fragmentary rear view of the ratchet mechanism for operating the feed table supporting the pile of blanks. Fig. 18 is a horizontal section in line 18—18, Fig. 17.

Like letters of reference refer to like parts in the several figures.

A represents the side frames of the machine connected at their upper ends by a horizontal top plate *a*.

B represents the vertically movable feed table which supports the pile of blanks. This table inclines from its front toward its rear end and is secured to a vertically sliding bracket *b* which is guided between upright guide ways *b'* secured to the front portion of the top plate. The feed table with its pile of blanks is supported and raised by an endless belt C which is secured by a screw *c* to a boss *c'*, formed on the sliding bracket *b*. The belt C passes around a driving pulley D which is mounted on a shaft *d* journaled in a bearing *d'* secured to one of the guide ways *b'*, and around a tightening pulley E mounted upon a shaft E' journaled in a bifurcated yoke *e*.

e' represents a vertically movable tension rod which is secured with its upper end to the yoke *e* and is guided in a bracket e^2 secured to the lower end of the guide ways. The lower end of the tension rod is secured to the rear end of a treadle e^3 which latter is pivoted upon a cross bar e^4 connecting the lower portions of the side frames. When the parts are in their normal position the tightening pulley is drawn downwardly by a spiral spring e^5 surrounding the tension rod and bearing with its upper end against the under side of the bracket e^2 while its lower end bears against an adjustable screw nut e^6 arranged upon the lower screw threaded portion of the tension rod. This causes the elevator belt to be drawn taut and to produce sufficient frictional contact of the belt with the driving pulley, so that the feed table will be raised upon rotating the driving pulley in the direction of the arrow in Fig. 16.

f represents a pawl arm journaled loosely upon the shaft *d* and carrying a pawl *f'* which engages with a ratchet rim f^2 formed upon the driving pulley D. The pawl arm is oscillated by a rod f^3 which is connected with any suitable moving part of the machine, whereby the driving pulley is intermittently rotated in the direction of the arrow in Fig. 16, and the feed table is raised as the blanks are successively fed off from the top of the pile. Backward movement of the driving pulley is prevented by a detent pawl f^4 piv-

oted upon one of the guide ways b' and engaging with the ratchet rim of the driving pulley D. When it is desired to lower the feed table to renew the supply of blanks, the tightener pulley is released from the tension of the spring e^5 by depressing the treadle e^3. The feed table is now free and will slide downwardly between the guide ways by its own weight, until it has reached its lowermost position. Upon releasing the treadle the belt is again tightened by the tension of the spring e^5 and the table is elevated by the frictional contact of the belt against the driving pulley as before. The driving shaft d is preferably provided with a hand wheel f^5 at its front end, whereby the feed table may be raised by hand when desired.

G represents a vertically movable presser plate arranged above the feed table and adapted to bear down upon the top of the pile of blanks upon the table. This presser plate is supported at its ends by horizontal rock arms g which are pivoted at their rear ends to brackets g' secured to the top plate of the machine. The front ends of the arms g are connected by rods g^2 to suitable cams or other moving parts of the machine whereby a vertical oscillating movement is imparted to the presser plate. When the presser plate reaches its lowest position, the elevating mechanism begins to operate and forces the top of the pile of blanks against the bottom of the presser plate with sufficient pressure to cause the elevator belt C to slip on the pulleys D E a distance equal to one tooth on the ratchet rim f^2 less the thickness of one blank fed off the top of the pile.

H H represent two vertical movable sucker nozzles whereby the front end of the top blank is raised from the pile by pneumatic suction. These nozzles are connected with a hollow shaft h which is arranged over the presser plate and is journaled in bearings h^2 secured to the presser plate. The nozzles extend forwardly from the hollow shaft and curve downwardly with their lower ends in front of the presser plate, so that the mouths of the nozzles bear against the top blank when the presser plate descends upon the pile of blanks. The hollow shaft is closed at one end and its opposite end is connected by a flexible tube h^3 with an air cylinder h^4 secured to the underside of the top plate and provided with a perforated lower head h^5 and a piston h^6. The movements of the piston and the nozzles are so regulated that when the nozzles bear upon the top blank a suction is created in the nozzles, which causes the top blank to adhere to the nozzles, and to be lifted from the pile of blanks when the presser plate and nozzles move upwardly from the pile. When the blank has been raised to the position in which it is seized by the gripper it is released from the nozzles by a blast or puff of air delivered against the blank by the movement of the piston in the air cylinder.

i represents an adjusting screw whereby the lower ends or mouths of the nozzles are adjusted with reference to the pile of blanks. This adjusting screw is secured with its lower end to the presser plate and its upper screw threaded end passes through a perforated ear i' formed on the hollow shaft and projects rearwardly therefrom. The upper end of the adjusting screw is provided with a thumb nut i^2 which bears against the top of the perforated ear. The nozzles are permited to yield upon bearing against the pile of blanks by a spiral spring i^3 surrounding the adjusting screw i and bearing with its ends against the perforated ear and the presser plate.

In cutting the blanks for the bags from very thin or light weight paper the edges of the blanks adhere more or less to, each other when removed from the paper cutting machine, which renders it difficut to separate them, and frequently causes the sucker nozzles to lift more than one blank at a time. For the purpose of overcoming this difficulty the top of the feed table is concaved transversely so that the upper surface of the feed table has a central depression running lengthwise of the feed table or parallel with the longest dimension of the blanks. This curvature of the feed table raises the side edges of the blanks or permits the central portions of the blanks to descend into the cavity of the feed table, and so loosens their side edges. In order to promote this separation of the side edges in the upper portion of the pile, where the effect of the concave feed table is less pronounced, the presser plate is provided with a block I which bears upon the central portion of the pile and depresses that portion and so causes the side edges of the blanks to rise and separate. This block has preferably a convex lower face of about the same curvature as the concave face of the feed table. The longitudinal central depression so formed in the pile of blanks causes their side edges to become slightly separated and permits the top blank to be readily and easily removed from the pile without disturbing the remaining blanks. Each of the bag blanks consists of a front or body portion J, a back or bottom flap j, a top or seal flap j', and side flaps j^2.

K represents a gum box which is supported above the pile of blanks upon the brackets g', and provided with take-up rollers k arranged with their lower portions in the gum box and secured to a transverse shaft k' which is journaled in bearings k^2 formed on the brackets g'.

k^3 are the transfer rollers whereby the gum is transferred from the take-up rollers to the longitudinal edges j^3 of the back flap j of each blank. Each of the transfer rollers consists of a disk k^4 secured to a transverse shaft k^5, and provided with an annular groove k^6, which receives a ring k^7 of rubber or similar flexible material. This rubber ring is provided with transverse notches k^8 in its periphery in which the gum collects when the transfer rollers rotate in contact with the take-up rollers.

The shaft k^5 is journaled in bearings k^9 formed in the rear ends of rock arms k^{10}. These rock arms are secured with their front ends to a rock shaft k^{11} which is journaled in bearings k^{12} formed in the brackets g'. The shaft of the transfer rollers is provided with a friction pulley which bears against a friction pulley mounted on the shaft of the take-up rollers when the transfer rollers are in contact with the take-up rollers, whereby the transfer rollers are rotated and receive a coating of gum from the take-up rollers. When the front end of the top blank has been raised by the sucker nozzles the transfer rollers descend and press upon the longitudinal margins of the back flap. Upon drawing the top blank rearwardly from the pile, the transfer rollers are rotated by contact with the moving blank and deposit a thin layer of gum along the longitudinal margins of the back flap. When the top blank is fed off from the pile the transfer rollers are again raised into contact with the take-up rollers.

k^{13} represents cylindrical pockets formed on the upper portions of the bearings k^9 in which the shaft of the transfer rollers is journaled.

k^{14} represents a movable bearing block arranged in each of the pockets and which is yieldingly pressed against the shaft k^5 by a spiral spring k^{15} arranged in the pocket and bearing with its ends against the bearing block and an adjusting screw k^{16} arranged in the upper end of the pocket as represented in Fig. 9. This arrangement permits the transfer rollers to bear on the blanks with a yielding pressure and accommodate themselves to any unevenness or variation in the pile of blanks.

L represents a gum fount or holder from which gum is supplied to the gum box. This gum fount is provided on its bottom with a charge opening or mouth l, which is inserted in a socket l' formed in the bottom of the gum box. The mouth of the gum fount rests above the bottom of the gum box upon vertical adjusting screws l^2. Upon placing the gum holder with its open mouth upon the adjusting screws the gum will flow from the holder into the gum box until the gum rises on a level with the mouth of the holder when the flow of gum from the latter stops. When the consumption of the gum has lowered its level below the mouth of the holder, the flow of gum from the latter resumes until the level of the gum is again sufficiently high to close the mouth of the holder. In this manner the supply of gum to the gum box is automatically controlled. By raising or lowering the adjusting screws l^2, the vertical position of the mouth of the gum holder can be adjusted so as to increase or decrease the depth of the gum in the gum box.

l^3 represents a clamp whereby the gum holder is held in place. This clamp is provided at its upper end with a rearwardly projecting arm l^4 carrying a pad l^5 which is pressed against the top of the holder. The lower end of the clamp is provided with a longitudinal slot l^6 which receives a clamping screw l^7 secured to the front side of the gum box and which permits the clamp to be raised and lowered to suit different size gum holders.

M represents a horizontally reciprocating gripper whereby the top blank is carried from the pile rearwardly to the creasing mechanism. As represented in Figs. 4 and 5, this gripper consists essentially of a lower jaw m formed in one piece with a slide m', an upper jaw m^2 pivoted to the lower jaw and a catch m^3 pivoted to the lower jaw and adapted to engage with a shoulder m^4 on the upper jaw.

m^5 represents a spring secured to the slide m' and bearing against the catch whereby the latter is held in engagement with the shoulder of the upper jaw.

m^6 is a spring secured with one end to the slide m' and bearing with its opposite end against the upper jaw whereby the latter is closed when released from the catch. The slide supporting the gripper is guided in a longitudinal guide way m^7, which is supported by front and rear standards m^8 m^9 secured to the top plate. A reciprocating movement is imparted to the gripper by means of a rock arm m^{10} secured at its lower end to a transverse rock shaft m^{11} and connected at its upper end with the gripper slide by a link m^{12}. During the forward movement of the gripper its jaws are held open by the catch and engage with the seal flap of the blank. Before the gripper has completed its forward movement its catch comes in contact with a stop m^{13} secured to the presser plate, whereby the upper jaw is released and the blank is clamped between the gripper jaws. During the return movement of the gripper the latter carries the blank with it, and before the gripper has completed its backward movement, the blank is released from the gripper by cams m^{14} secured to the guide way m^7 and engaging with rollers m^{15} pivoted on opposite sides of the upper jaw, whereby the latter is raised and permits the catch to engage with the shoulder of the upper jaw to hold it open.

N represents two longititudinal guide rails which support the sides of the blank as it is carried by the gripper to the creasing mechanism. Each of the guide rails is provided with a horizontal face n upon which the side flap of the blank rests and a vertical face n' which engages against the edge of the side flap, and holds the blank against lateral movement.

n^2 are guard rails arranged lengthwise over the guide rails and secured to the guide rails by bolts n^3. The front ends of the guide rails and guard rails are curved outwardly in opposite directions to facilitate the entrance of the blanks between them.

O represents two pivoted stops on fingers whereby the blank is placed in the proper position for creasing the same. These fingers are arranged over the rear portion of the guide

rails and are each provided on their front ends with a vertical face e, while their rear ends are pivoted to the upper ends of upright rock arms o'. The latter pass through openings o^2 in the guide rails and are secured with their lower ends to a rock shaft o^3 arranged underneath the guide rails, and journaled in bearings o^4 secured to the top plate. The movement of the gripper is so regulated that it will always carry the blank backwardly a short distance beyond the point or position in which it is creased, and during this time the stops or fingers are in their rearmost position. When the blank is released from the gripper the fingers move forward with their vertical faces in contact with the front edge o^5 of the side flaps, and carry the blank forwardly to its proper position for creasing.

o^6 represents an outer rock arm secured with its rear end to one end of the rock shaft o^3. This rock arm o^6 is provided with a vertical adjusting screw o^7 which bears against the top plate and limits the forward throw of the fingers o. o^8 represents an upright rod pivoted with its lower end to the front end of the rock arm o^6, and passing with its upper portion through an eye o^9 formed on a cross head o^{10}. The latter is secured to a vertically reciprocating rod o^{11} arranged to slide in one side of the front standard m^8.

o^{12} o^{13} are collars secured to the rod o^8 above and below the eye o^9, and o^{14} is a spiral spring surrounding said rod and bearing with its ends against the eye and the lower collar. When the cross head descends its eye o^9 bears upon the spring o^{14}, and the latter bears upon the lower collar causing the upright rod to be carried downwardly until the adjusting screw o^7 strikes the top plate, and arrests the further downward movement of the rod o^8. The cross head in continuing its downward movement compressed the spring o^{14}. During the last portion of the upward movement of the cross head its eye o^9 strikes the upper collar of the rod o^8 and carries the fingers to their rearmost position. By this means of yieldingly connecting the rod o^8 with the cross head, a variable throw may be imparted to the stops or fingers o from the cross head. To prevent the fingers from being lifted too high, the front end of each finger is provided with a depending neck o^{15}, which passes through a slot o^{16} in the guide rail and the lower end of the neck is provided with a head o^{17} which is adapted to strike against the under side of the guide rail upon raising the finger. The blank is prevented from being carried forward too far by pawls o^{18}, which are pivoted to the front ends of the guard rails and engage against the rear edges o^{19} of the side flaps of the blank.

P represents a creasing table secured to the top plate between the guide rails. This table is provided in its rear portion with a transverse groove p, and along its sides with longitudinal grooves p'. The outer sides of the longitudinal grooves are preferably formed by plates p^2 secured to the longitudinal sides of the creasing table and projecting a short distance above the latter.

Q represents a creasing plunger arranged over the creasing table and secured to the lower end of the rod q which is guided in the front standard m^8. The upper end of the rod q is secured to the cross head o^{10} whereby a vertically reciprocating movement is imparted to the creasing plunger. The latter is composed of two arms q', which straddle the guide way of the gripper slide, and carrying at their lower ends creasing plates q^2 which engage with the longitudinal grooves p' in the creasing table and transverse creasing plates q^3, which engage with the transverse groove p in the creasing table. The creasing plates q^2 q^3 project below the plunger a distance nearly equal to the depth of the grooves in the creasing table, and form ribs or flanges along the longitudinal and rear sides of the plunger. The plunger upon descending bears upon the blank and carries it from the guide rails to the creasing table. During the last portion of the downward movement of the plunger, its longitudinal creasing plates press the blank in the longitudinal grooves p' of the creasing table forming the creases q^4 in the blank for the side flaps while the transverse creasing plates q^3 press the blank into the transverse groove p in the creasing table forming the crease q^5 for the seal flap.

R represents folding wings or fingers whereby the side flaps are folded inwardly over the body portion of the blank. These wings or fingers are arranged between the guide rails and creasing table and are secured to the upper arms r of elbow levers r'. The latter are secured to horizontal rock shafts r^2 journaled in bearings r^3 secured to the under side of the top plate. The upper arms r of the elbow levers pass upwardly through openings r^4 in the top plate, while their lower arms r^5 are pivoted to connecting rods r^6 which are operated from any suitable moving part of the machine. When the creasing plunger rises after having creased the blank, the folding wings or fingers R move inwardly and fold the side flaps over the body of the blank.

S represents a creasing blade whereby a transverse crease s for the back or bottom flap is made in the blank. This blade is arranged transversely over the rear portion of the blank and is secured to the upper end of a rock arm s'. The latter is curved toward one side of the machine and is secured with its lower end to a rock shaft s^2, which is journaled in bearings s^3 secured to the top plate. An oscillating movement is imparted to the creasing blade by a connecting rod s^4 pivoted to the rock arm s'.

T T' represent front and rear pressing rollers whereby the gummed edges of the back flap and the folded side flaps are pressed together. These rollers are arranged transversely in front of the creasing table and the

point of contact between the rollers is in line with the path of the creasing blade, so that when the latter descends it creases the blank and carries it downwardly between the rollers. The latter seize the blank on opposite sides of the crease *s*, and draw the blank downwardly between the rollers, whereby the back flap and body are folded and the gummed back flap and side flaps are pressed together. Each of the pressing rollers consists of two rubber end sections t' which press against the edges of the back flap, and the side flaps and a central metallic section t^2 arranged between the rubber sections. The metallic section is of smaller diameter than the rubber sections to permit the rubber sections to approach each other when worn. The rear roller is mounted on a driving shaft t^3 journaled in bearings t^4, which are formed in blocks t^5 secured to the top plate. The front pressing roller is mounted upon a shaft t^6 journaled in movable bearings t^7 which are arranged in horizontal slots t^8 formed in the front portions of the blocks t^5. The front pressing roller is yieldingly held in contact with the rear pressing roller by springs *u* arranged in the slots of the blocks, and bearing with their ends against the blocks and the movable bearings.

v represents a gear wheel secured to the shaft of the rear pressing roller and meshing with a similar gear wheel *w* secured to the shaft of the front pressing roller, whereby both rollers are caused to rotate in unison. *x* represents a chute secured to the under side of the top plate and which receives the folded paper bags discharged from the pressing rollers. This chute delivers the bags upon a conveyer belt *y* which latter passes with its receiving portion around a pulley *z* and delivers the bags to any desired place.

I claim as my invention—

1. The combination with the feed table upon which the pile of blanks is supported, of a vertically sliding bracket supporting said table, a driving belt pulley, and an endless friction belt connected with said bracket and running over said pulley, whereby the feed table is elevated by the frictional contact of the belt upon the pulley, substantially as set forth.

2. The combination with the vertically-movable feed table, of an endless elevator belt connected with said table, a driving pulley supporting the upper portion of the belt, and a tightener pulley supporting the lower portion of the belt and made adjustable toward and from the driving pulley, substantially as set forth.

3. The combination with the vertically-movable feed table, of an endless friction belt connected with said table, a pulley supporting the upper portion of the belt, a tightener pulley supporting the lower portion of the belt and mounted upon a shaft journaled in a movable bearing, a spring whereby the movable bearing is moved in one direction, and a treadle whereby the movable bearing is moved in the opposite direction, substantially as set forth.

4. The combination with the vertically movable feed table, a sliding bracket supporting the table and guide ways in which the sliding bracket moves, of an endless elevator belt connected with the sliding bracket, a driving pulley carrying said belt, a tightener pulley mounted on a shaft journaled in a movable yoke, a tension rod secured to the yoke and guided in a stationary bracket secured to the guide ways, a treadle connected with the tension rod, a spring surrounding the tension rod and bearing with its end against the stationary bracket, and a screw nut arranged upon the tension rod, substantially as set forth.

5. The combination with the vertically movable feed table, for supporting the pile of blanks, of an endless elevator belt connected with the table, pulleys supporting the elevator belt, and a vertically movable presser plate adapted to press downwardly upon the pile of blanks, substantially as set forth.

6. The combination with a vertically movable feed table having a concave upper side whereby the edges of the blanks are raised and their central portions are depressed, of a presser plate bearing upon the depressed central portion of the pile and permitting the edges of the blanks to rise and separate, substantially as set forth.

7. The combination with the vertically movable feed table for supporting the pile of blanks, of a vertically movable plate arranged over the feed table, a hollow shaft journaled in bearings secured to the movable plate and provided with pneumatic suction nozzles adapted to raise the blanks from the pile, an adjusting screw connecting the plate with an ear formed on the hollow shaft, and a spring interposed between said ear and the plate, substantially as set forth.

8. The combination with the vertically movable feed table for supporting the pile of blanks, and a gum box arranged over the feed table and provided with a take-up roller, of a transfer roller whereby the gum is transferred from the take-up rollers to the blanks and composed of a disk provided in its periphery with an annular groove and a rubber ring arranged in said groove, and provided in its face with transverse notches, substantially as set forth.

9. The combination with the vertically movable feed table for supporting the pile of blanks, of a gum box arranged over the feed table and provided with take-up rollers, a transfer roller whereby the gum is transferred from the take-up rollers to the blanks, a shaft supporting the transfer rollers, rock arms provided with bearings in which said shaft is journaled, pockets formed upon the upper sides of said bearings, blocks arranged in said pockets and bearing against the shaft, springs arranged in the pockets and bearing against the block, and an adjusting screw arranged in the outer ends of the pockets and bearing against the springs, substantially as set forth.

10. The combination with the gum box provided in its bottom with a socket, of vertical adjusting screws arranged in said socket, and a gum fount or holder provided with a discharge mouth at its lower end and supported upon said screws, substantially as set forth.

11. The combination with the gum box provided in its bottom with a vertically adjustable support, of a gum fount or holder provided with a discharge mouth at its lower end and resting with its bottom upon said support, and a clamp adjustably secured to the gum box and bearing against the top of the gum fount, substantially as set forth.

12. The combination with the feed table for supporting the pile of blanks, the creasing table and the movable gripper whereby the blanks are carried from the pile to the creasing table, of guide rails arranged on opposite sides of the creasing table for guiding and supporting the blanks, pivoted fingers arranged above the guide rails and provided with vertical faces which are adapted to engage against the edges of the blanks, a transverse rock shaft, vertical rock arms connecting the rock shaft with said fingers, and a horizontal rock arm secured to said rock shaft and provided with an adjusting screw whereby the forward movement of the fingers is regulated, substantially as set forth.

13. The combination with the feed table for supporting the pile of blanks, the creasing table and the movable gripper, whereby the blanks are carried from the pile to the creasing table, of guide rails arranged on opposite sides of the creasing table for guiding and supporting the blanks, fingers arranged above the guide rails and provided with vertical faces which are adapted to engage against the edges of the blanks, a transverse rock shaft provided with inner rock arms pivoted to said fingers, an outer rock arm having its rear end connected with the rock shaft, a vertically movable cross head, an upright rod passing through said cross head, and having its lower end connected with the front end of the outer rock arm, collars secured to the upright rod above and below the cross head, and a spring surrounding said rod and bearing with its ends against the cross head and the lower collar, substantially as set forth.

14. The combination with the feed table for supporting the pile of blanks, the creasing table and the movable gripper, whereby the blanks are carried from the pile to the creasing table, of guide rails arranged on opposite sides of the creasing table for supporting and guiding the blanks, fingers arranged above the guide rails and pivoted with their rear ends to rock arms, depending necks formed on the front ends of the fingers and passing through slots formed in the guide rails, and heads formed on the lower ends of said necks, and adapted to engage against the under sides of the rails to limit the upward movement of the fingers, substantially as set forth.

15. The combination with the feed table for supporting the pile of blanks, of a creasing table provided in its upper side with longitudinal grooves and a transverse groove, a movable gripper whereby the blanks are carried from the pile to the creasing table, a vertically movable plunger provided on its under side with longitudinal and transverse creasing ribs whereby the blank is pressed into the longitudinal and transverse grooves of the creasing table, folders whereby the side flaps of the blank are folded inwardly pressing rollers arranged in front of the creasing table, and a movable creasing blade whereby the blank is carried between the rollers, substantially as set forth.

16. The combination with the feed table for supporting the pile of blanks, the creasing table and the movable gripper for carrying the blanks from the pile to the creasing table, of a creasing plunger which presses the blanks upon the creasing table, folding wings or fingers whereby the side flaps are folded inwardly, pressing rollers arranged in front of the creasing table and a movable creasing blade whereby the blank is carried between the rollers, substantially as set forth.

17. The combination with the feed table for supporting the pile of blanks, the creasing table, the movable gripper for carrying the blanks from the pile to the creasing table, the creasing plunger and the side flap folders of two pressing rollers arranged in front of the creasing table, a shaft supporting one of said rollers and journaled in stationary bearings, and a shaft supporting the other roller and journaled in yielding bearings, substantially as set forth.

18. The combination with the feed table for supporting the pile of blanks, the creasing table the movable gripper for carrying the blanks from the pile to the creasing table, the creasing plunger and the side flap folders of two pressing rollers arranged in front of the creasing table, and each composed of two rubber end sections and a metallic section arranged between the rubber sections, substantially as set forth.

Witness my hand this 24th day of October, 1892.

ROBERT S. ANDERSON.

Witnesses:
CHARLES G. WINCHELL,
THOMAS J. ANDERSON.