(No Model.)

C. TREGONING.

LUBRICATOR.

No. 491,389. Patented Feb. 7, 1893.

Fig 5

Fig 1

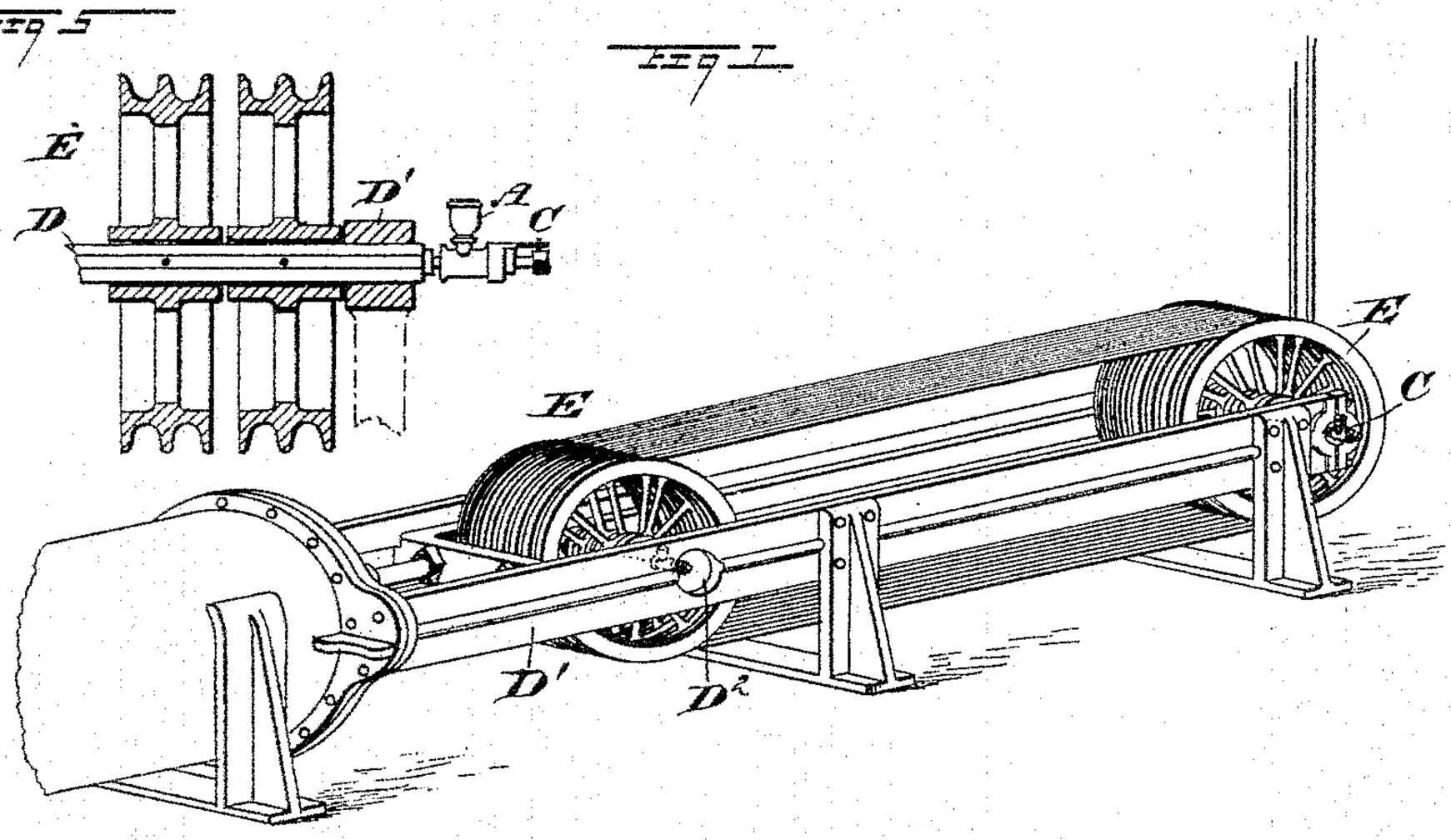

Fig 2

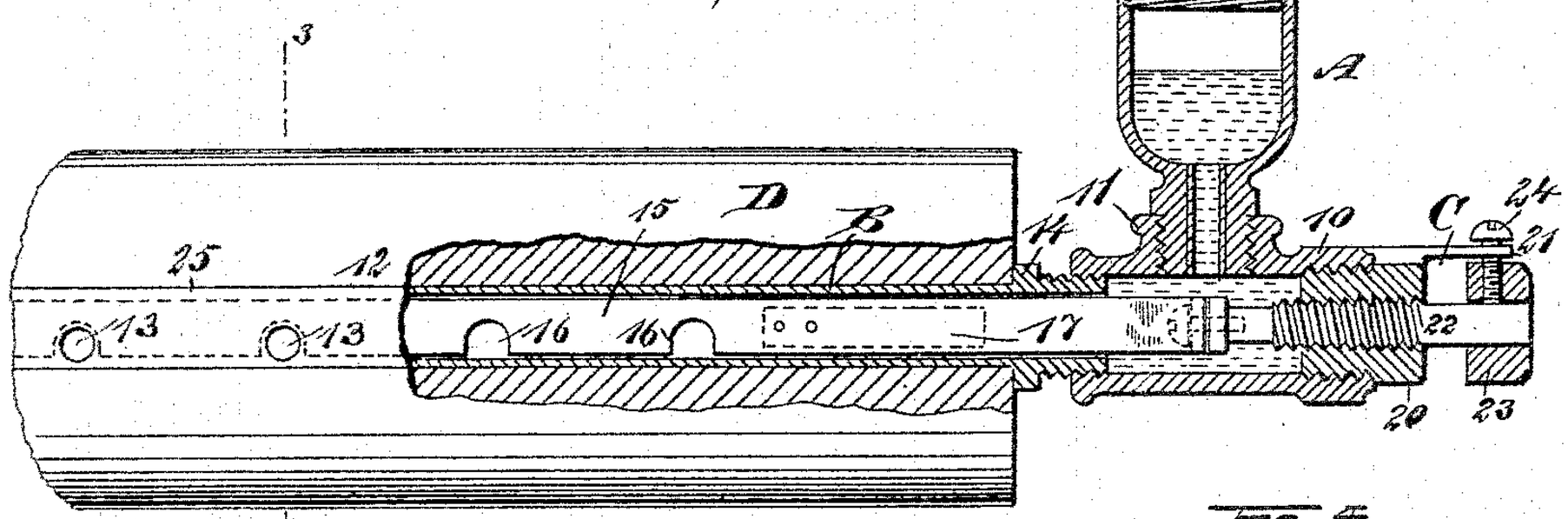

Fig 4

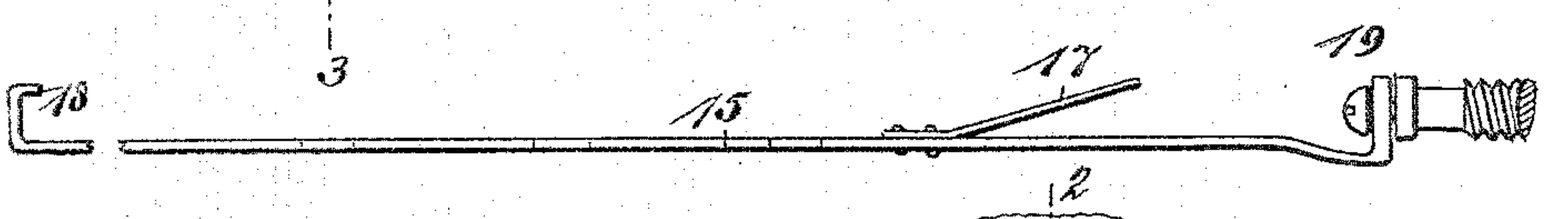

Fig 3

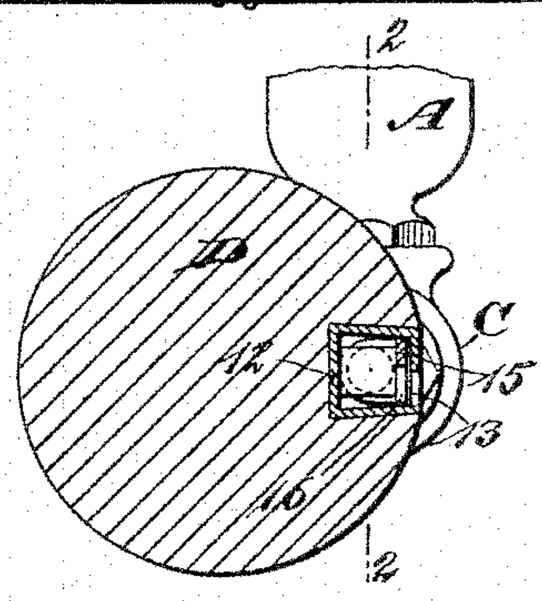

WITNESSES:

H. Walker

C. Sedgwick

INVENTOR

C. Tregoning

BY Munn & Co

ATTORNEYS.

THE NORRIS PETERS CO., PHOTO-LITHO., WASHINGTON, D. C.

UNITED STATES PATENT OFFICE.

CHARLES TREGONING, OF NEW YORK, N. Y.

LUBRICATOR.

SPECIFICATION forming part of Letters Patent No. 491,389, dated February 7, 1893.

Application filed September 17, 1892. Serial No. 446,197. (No model.)

To all whom it may concern:

Be it known that I, CHARLES TREGONING, of New York city, in the county and State of New York, have invented a new and Improved Oiling Device for Loose Pulleys, of which the following is a full, clear, and exact description.

My invention relates to an oiling device for loose pulleys, being especially adapted for use upon elevator machinery, and the object of the invention is to provide a device whereby all of the pulleys revolving upon a shaft may be simultaneously and constantly oiled, and whereby also the amount of oil delivered to the pulleys will be under the control of the operator, and also whereby the device may be manipulated with perfect safety to the operator.

A further object of the invention is to provide an oiling device of the nature above described, which will comprise but few parts, will be exceedingly simple in its construction and capable of being readily applied wherever such device is necessary.

The invention consists in the novel construction and combination of the several parts, as will be hereinafter fully set forth and pointed out in the claims.

Reference is to be had to the accompanying drawings forming a part of this specification, in which similar figures and letters of reference indicate corresponding parts in all the views.

Figure 1 is a perspective view of the winding drums or pulleys of an elevator, illustrating the application of the device thereto; Fig. 2 is a side elevation of a portion of a shaft, a portion of the side being broken away, and the view also illustrates the device in longitudinal section applied to the shaft; Fig. 3 is a transverse section taken practically on the line 3—3 of Fig. 2; Fig. 4 is a detail view of the valve slide; and Fig. 5 is a broken transverse section of the pulleys and the bearing of the shaft, the latter and the oiling device appearing in side elevation.

The device consists of an oil cup A, of any suitable or approved construction, and this cup is preferably removably connected with a sleeve 10 having a branch 11 in one side, the interior of the branch and the interior of the sleeve at its ends being threaded. The cup and the sleeve may be termed properly the body of the oiling device, as one end of the sleeve is adapted to receive a valve B; and at the opposite end of the sleeve the adjusting device C, controlling the movement of the valve is located. The valve consists of a tubular section 12, which section may be of any desired length, and said section is closed at one end and open at the other. The tubular section of the valve, which may be properly termed its casing, is preferably made rectangular in cross section; and in one side the casing is provided with a series of openings 13, which openings are ordinarily longitudinally arranged.

At the open end of the valve casing a head 14, is formed, and this head is exteriorly threaded, and is shaped in such manner that it may be screwed into one end of the body sleeve 10, as shown in Fig. 2. The valve slide consists ordinarily of a strip of metal 15, or like material, which strip of metal is adapted to enter the valve casing and slide therein to cover the apertures 13, to wholly uncover them or to partially uncover them; to that end the strip 15 of the body of the slide is provided with a series of openings 16, which openings are adapted to register with the openings 13 in the valve casing, or may be slid past the latter. The body 15 of the slide is kept in engagement with the apertured side of the casing through the medium of a spring 17, which spring is attached to the body of the slide as shown in Fig. 4 and has constant bearing against the side of the casing opposite that provided with the apertures. The inner end of the body of the slide is usually bent upon itself, forming a tail-piece 18, which may be engaged with the closed end of the valve casing upon a predetermined movement of the slide. This tail piece also serves as a cleaning device to remove any foreign matter that may have collected in the valve casing. The body of the slide at its opposite or outer end has a head 19 formed thereon, and this head is utilized as a means for connecting the slide with the adjusting mechanism C. In applying the slide and valve casing they are preferably located at the side of the shaft to be lubricated, upon which the least strain occurs.

The adjusting device consists of a nut 20,

which is adapted to be screwed into the outer end of the body sleeve 10, and the nut is provided with an arm 21, horizontally projected therefrom and extending over the front face of the nut. The exterior of the nut is therefore threaded as well as the interior, and through the interior of the nut a screw 22, is passed, which screw at its inner end has a revoluble connection with the head 19 of the slide to permit the slide to be moved longitudinally by the screw, without turning in the casing. The screw 22, is preferably provided at its outer end with a nut 23, which may be milled or made polygonal in general contour. The nut fits loosely on the screw 22 and is capable of being fixed in place thereon by a set screw or threaded pin 24, adapted to engage with the arm 21 of the nut, so that the screw is permitted to make but a single revolution when turned either to the right or to the left. Furthermore, by loosening the screw or pin 24, the nut 23 may be moved in or out upon the screw 22 and again fixed on the latter, to permit of any desired longitudinal adjustment of the body 15 of the slide in relation to the section 12 of the valve.

The shaft D, upon which the pulleys E to be oiled are mounted, is fixed in the sides of the frame D′, and the shaft is provided with an exterior longitudinal channel 25, and in this channel the casing of the valve is fitted in such manner that the outer face of the casing will be flush with the outer surface of the shaft. Thus the wheels, pulleys or drums E, may turn freely upon the shaft, and the hub of each pulley covers one of the apertures 13 in the valve casing. The frame D′ is apertured at the side as shown at D^2 in Fig. 1, to permit of the withdrawal of the oiling device whenever necessary, and it will be obvious that such withdrawal may be made while the pulleys are in action.

The operation of the device is very simple, as after the device has been fitted to a shaft and the pulleys are in place thereon, oil will be continuously and simultaneously fed to all of the pulleys upon the shaft by opening the apertures 13 in the valve casing, and this is accomplished by the manipulation of the slide in one direction; and by carrying the slide to a greater or less extent in the opposite direction more or less oil will be supplied to the bearings of the pulleys. When the pin 24, is in engagement with one side of the arm 21, the apertures 13 in the valve casing are fully opened; and when the pin engages with the opposite side of the arm the apertures will be closed.

The efficacy of this device is apparent; and it is obvious also that it may be manipulated to successfully oil any number of pulleys upon a shaft without danger to the operator or waste of oil, as the mechanism for controlling the feed may be located at the extreme outer end of the shaft to which the device is to be applied, as shown in Fig. 1.

Having thus described my invention, I claim as new, and desire to secure by Letters Patent,—

1. In a device for oiling shafts, the combination with a tubular body, an apertured casing in communication with the body and an oil cup in communication with the body, of a slide fitted in the casing and provided with apertures and a screw projecting from one end of the tubular body and having a swiveled connection with the slide, substantially as described.

2. In a device for oiling shafts, the combination with a tubular body, an oil cup in communication with the body and an apertured casing in communication with said body, of a spring held slide in the casing and provided with apertures, a screw projecting through one end of the body and having its inner end swiveled to the slide, and means for limiting the movement of the screw, substantially as herein shown and described.

3. In a device for oiling shafts, the combination, with a tubular body, an oil cup in connection therewith and a valve connected with the tubular body, said valve comprising a casing having a series of apertures therein, a slide having movement in the casing and provided with openings, and a spring pressing the slide against the surface of the valve casing containing the openings, of an adjusting device adjustably connected with the tubular body and also connected with the valve slide, substantially as and for the purpose specified.

4. In a device for oiling shafts, the combination of a tubular body an oil cup and an apertured casing, of an apertured slide in the casing, a screw having a swiveled connection with the slide and projecting through one end of the casing, an adjustable nut on the end of the screw, and an arm secured to the body and adapted to be engaged by a projection carried by the nut, substantially as and for the purpose set forth.

CHARLES TREGONING.

Witnesses:
F. W. HANAFORD,
EDGAR TATE.