(No Model.)

C. A. NELSON.

HAME STAPLE.

No. 491,128. Patented Feb. 7, 1893.

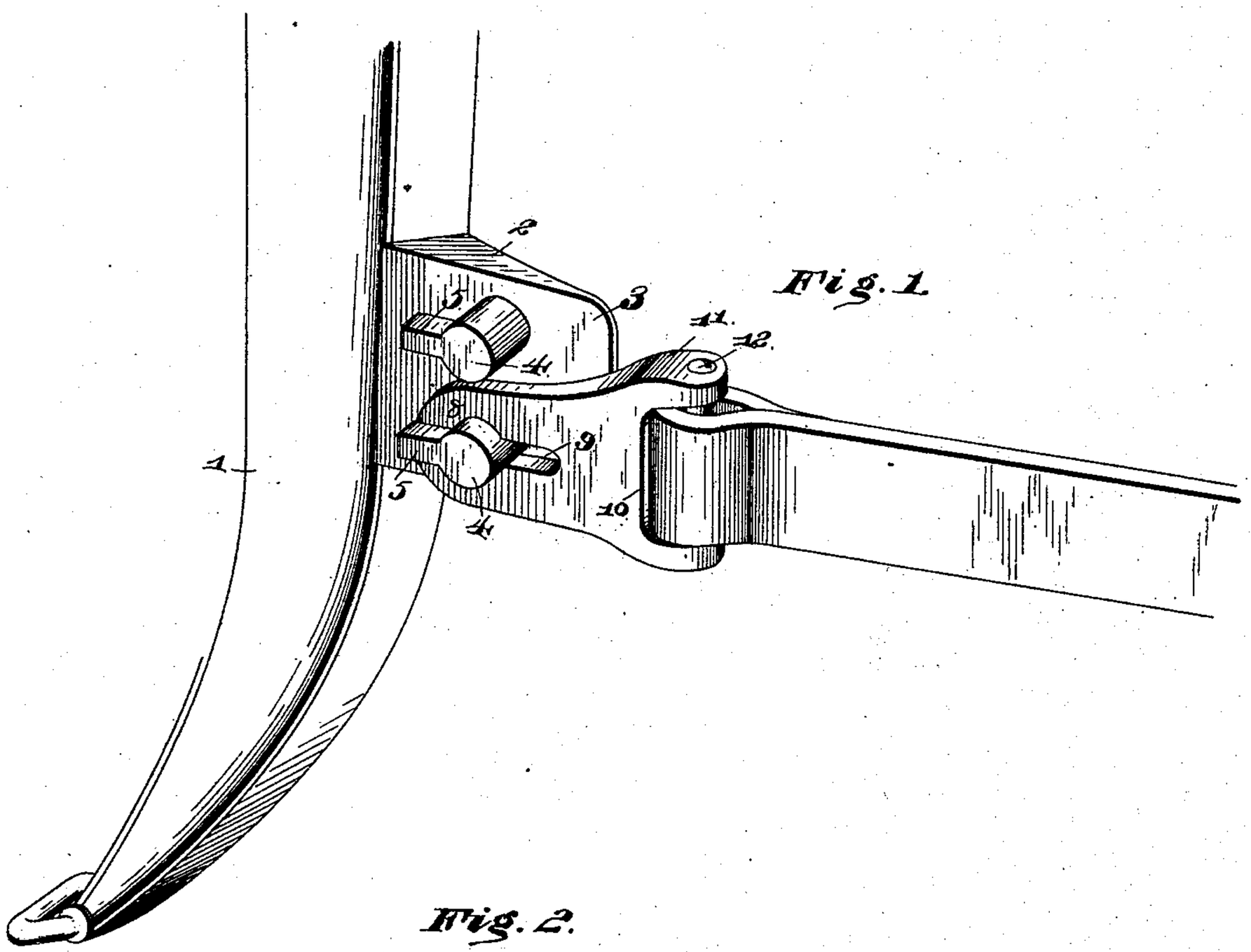

Fig. 2.

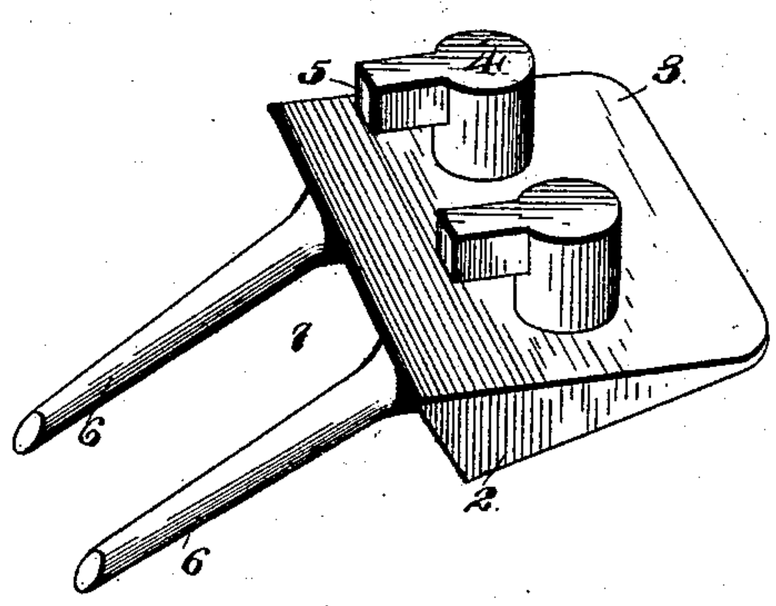

Fig. 3.

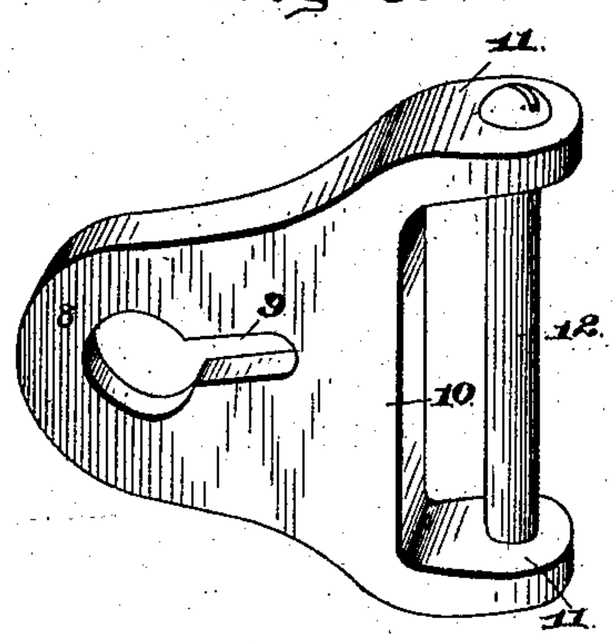

Witnesses
Chas Ford.

Inventor
Charles A. Nelson.

By his Attorneys,
Chas. E. Hyer
C. A. Snow & Co.

THE NORRIS PETERS CO., PHOTO-LITHO., WASHINGTON, D. C.

UNITED STATES PATENT OFFICE.

CHARLES A. NELSON, OF ITHACA, MICHIGAN.

HAME-STAPLE.

SPECIFICATION forming part of Letters Patent No. 491,128, dated February 7, 1893.

Application filed April 30, 1892. Serial No. 431,291. (No model.)

To all whom it may concern:

Be it known that I, CHARLES A. NELSON, a citizen of the United States, residing at Ithaca, in the county of Gratiot and State of Michigan, have invented a new and useful Hame-Staple, of which the following is a specification.

This invention relates to certain new and useful improvements in hame staples for the purpose of connecting the tugs or traces thereto, and consists in the construction and arrangement of the parts thereof as will be more fully hereinafter described and claimed.

The object of this invention is to provide means for raising or lowering the line of draft on a hame, and also to compensate for the difference in the size of animals, the parts being simple and effective in their construction and operation, strong and durable, easily and readily applied, and comparatively inexpensive in manufacture.

In the drawings—Figure 1 is a perspective view of a portion of a hame and trace or tug, showing the improved attachment in connection therewith. Figs. 2, and 3 are similar views of the parts of the attachment disconnected.

Similar numerals of reference indicate corresponding parts in the several views.

Referring to the drawings, the numeral 1 designates a hame staple or connection, which consists of a wedge-shaped plate, having an inner curved side 2 to conform to the adjacently situated parts, and an outer beveled or inclined side 3, having posts or studs 4 projecting outward therefrom in parallel lines with an intervening space between the same, and having lugs or ears 5 projecting from the upper portion thereof and forwardly or to the front. The staple or connection is formed with parallel legs 6, extending from the head 7, which are adapted to be driven into the wood of the hame to secure the staple or connection in position; and when said legs 6 are in securing position, they are at an angle of inclination to the staple or plate and extend obliquely into the hame wood. To the front end of the trace is attached a cock-eye 8, having a key-hole slot 9 therein, which conforms in shape to the top portion of the studs or posts 4 with their lugs or ears 5. The said cock-eye is formed with a rear bifurcated end 10, to provide ears 11, in which is located a pin 12, screw-threaded at one end and where the said pins are used with oppositely situated right and left cock-eyes, they will be correspondingly changed in position or manner of inserting the same, as will be evident. The rear face of each of the cock-eyes is straight and the outer face may be suitably ornamented or curved as desired. The slots 9 of the cock-eyes, when drawn up for engagement with the posts 4 and their lugs 5, are in reverse positions to said posts and lugs, and are turned until engagement thereof is secured, when the lug 5, extending from the post to which the cock-eye is applied, will extend over a portion of the cock-eye and lock the same in connection with the hame staple. When it is desired to change the draft line, the cock-eye is disconnected from one post 5 and attached to the adjacent one, either in a higher or lower position as may be required. This arrangement is especially useful when the parts are employed in connection with animals differing in size, and when it becomes necessary to adjust the hame.

The advantages and conveniences arising from a device of this character constructed as set forth are readily apparent to those skilled in the art.

Having thus described the invention, what is claimed as new is—

The herein described attachment, consisting of a hame staple having a series of posts thereon with lugs extending from the upper portions thereof arranged adjacent to each other, and a cock-eye having a single key-hole slot therein as set forth for engagement with the said posts, the said hame staple having obliquely arranged securing legs which are driven into the hame and an inner curved side and an outer beveled or inclined face from which said posts project, substantially as described.

In testimony that I claim the foregoing as my own I have hereto affixed my signature in the presence of two witnesses.

CHARLES A. NELSON.

Witnesses:

JAS. W. HOWD,

D. D. PIERCE.