(No Model.) 2 Sheets—Sheet 1.

J. M. COTTON.

BUNDLE RACK FOR CARS.

No. 483,283. Patented Sept. 27, 1892.

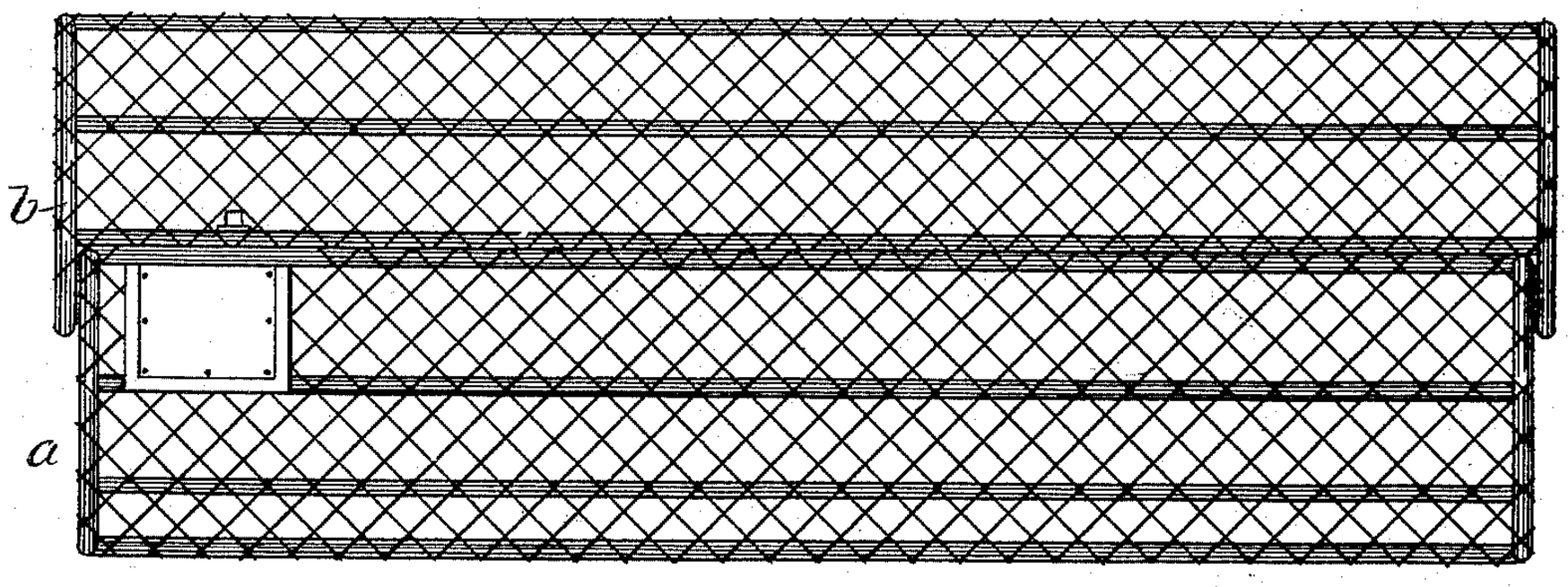

Fig. 2

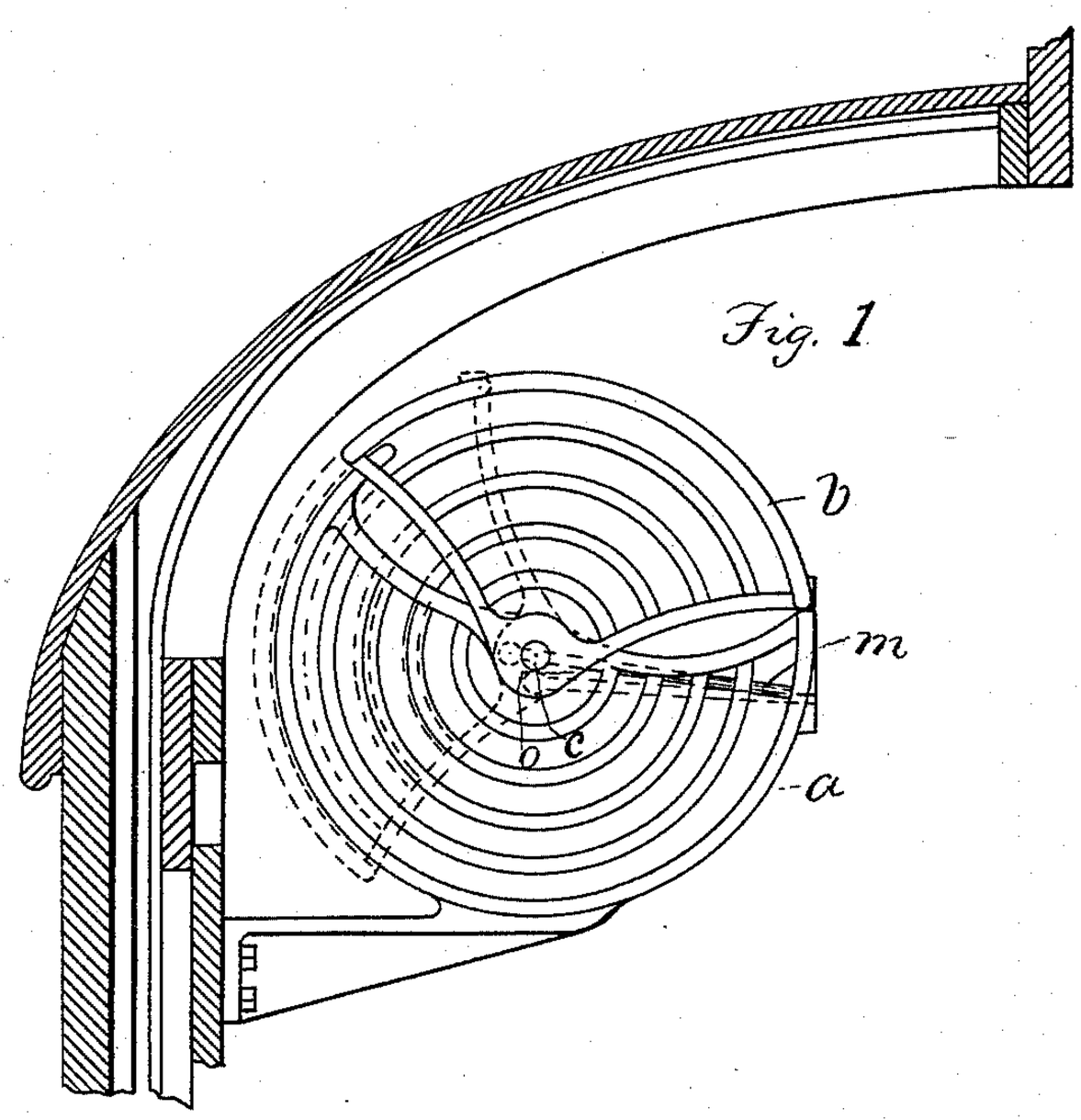

Fig. 1

WITNESSES.

J. Walton Ellis

A. D. Gover.

INVENTOR.

J. M. Cotton,

by

Wright, Brown & Cressley.

Attys.

THE NORRIS PETERS CO., PHOTO-LITHO., WASHINGTON, D. C.

(No Model.) 2 Sheets—Sheet 2

J. M. COTTON.

BUNDLE RACK FOR CARS.

No. 483,283. Patented Sept. 27, 1892.

Fig. 4.

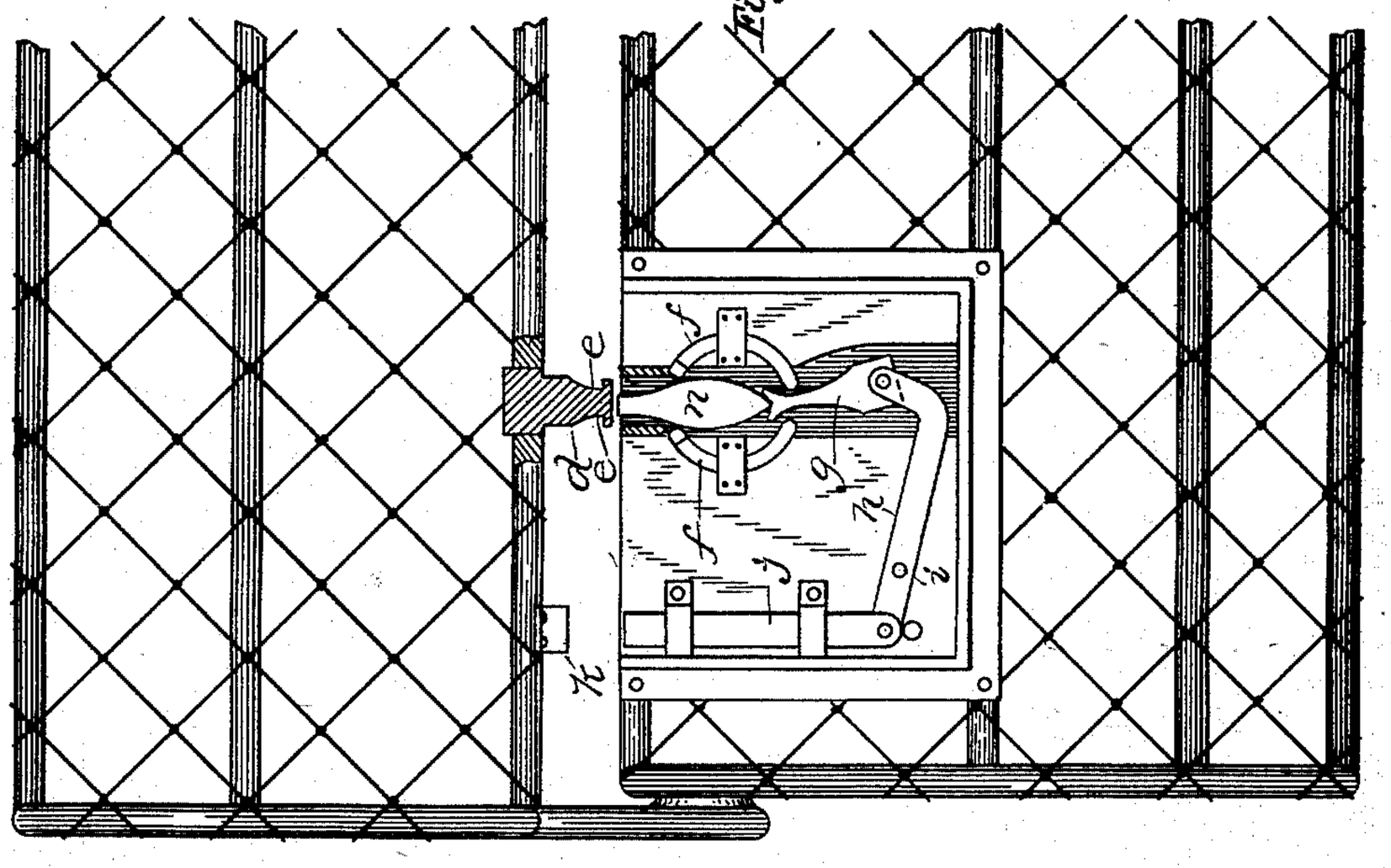

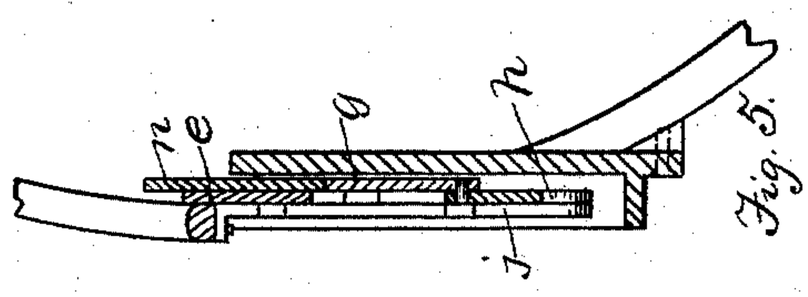

Fig. 5.

Fig. 3.

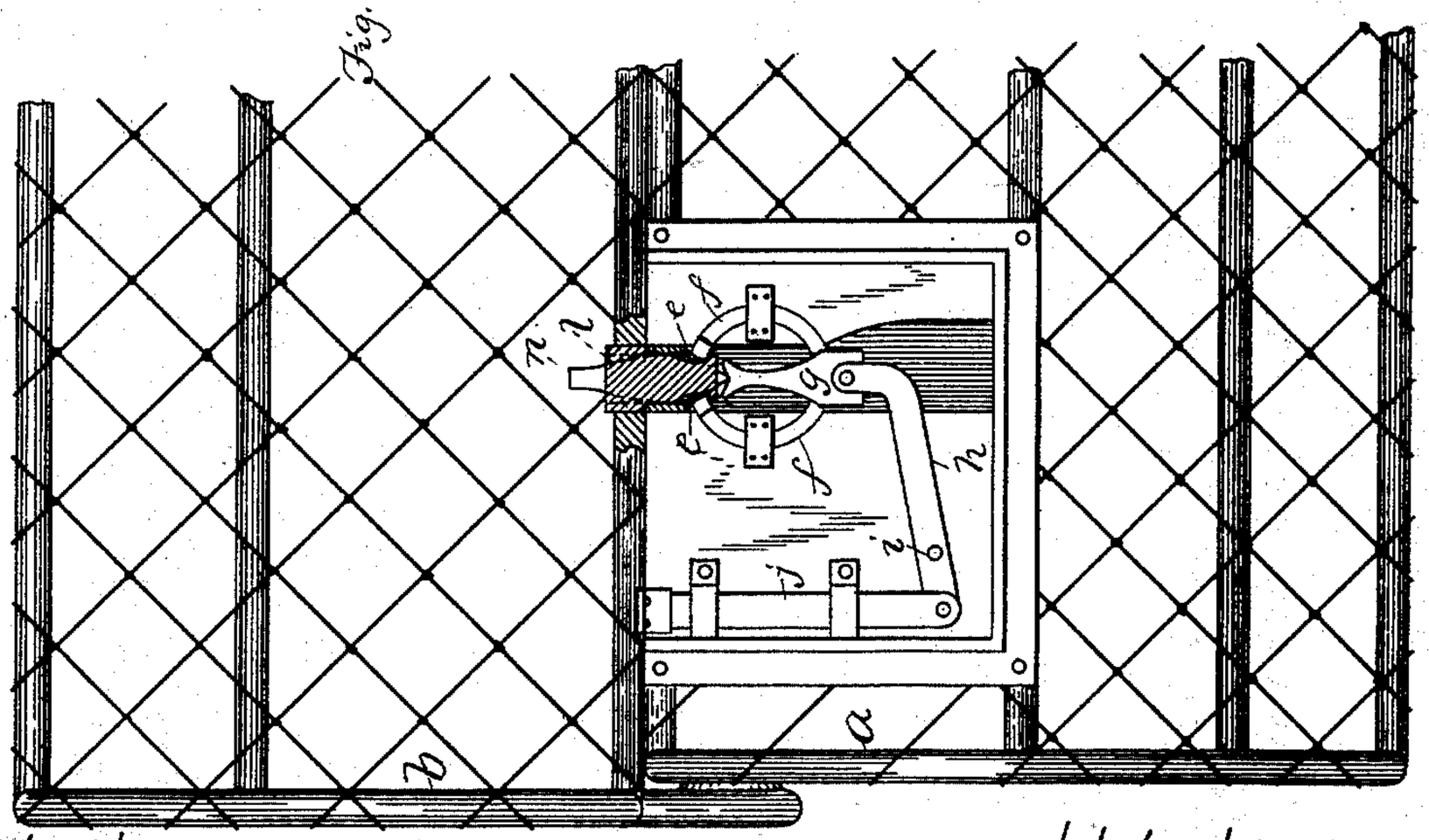

WITNESSES.

J. Matthew Allen

A. D. Sprout.

INVENTOR.

J. M. Cotton,

by

Wright, Brown & Crosseley,

Attys.

THE NORRIS PETERS CO., PHOTO-LITHO., WASHINGTON, D. C.

UNITED STATES PATENT OFFICE.

JAMES M. COTTON, OF ASHLAND, NEW HAMPSHIRE.

BUNDLE-RACK FOR CARS.

SPECIFICATION forming part of Letters Patent No. 483,283, dated September 27, 1892.

Application filed May 10, 1892. Serial No. 432,434. (No model.)

To all whom it may concern:

Be it known that I, JAMES M. COTTON, of Ashland, in the county of Grafton and State of New Hampshire, have invented certain new and useful Improvements in Bundle Racks, of which the following is a specification.

My invention has relation to bundle-racks; and it has for its object the provision of improvements whereby bundle-racks may be employed in railway cars and coaches and in restaurants, hotels, club-rooms, and elsewhere as lockers, so that a person may place articles of apparel and other personal articles in the rack, lock them therein, and receive a key or key-check from the rack in the act of locking the same, so that admission may be gained thereto when the said articles may be wanted or needed.

The invention consists of a bundle-rack comprising in its construction a fixed or stationary and a movable or closable part, the construction and arrangement being such that the movable part may be closed and locked upon the fixed part by means of a spring or other automatic lock connected with one of the parts, a check or key-holder being connected with the bundle-rack and provided with a check or key which may be ejected or otherwise put in possession of the user of the rack.

My invention also consists of a peculiar lock for the bundle-rack equipped with a check or key-ejecting means, all as will more fully appear hereinafter.

Reference is to be had to the annexed drawings and the letters of reference marked thereon, forming a part of this specification, the same letters designating the same parts or features, as the case may be, wherever they occur.

Of the drawings, Figure 1 is an end view of the improved bundle-rack; showing by dotted lines the mode of operation of the movable part and in section a portion of a car-body. Fig. 2 is a front elevation of a bundle-rack equipped with my improvement. Fig. 3 is a diagram of the lock in the position it will be when the bundle-rack is closed. Fig. 4 is a view similar to Fig. 3, showing the position of the parts of the lock when the rack is unlocked. Fig. 5 is a sectional view of the lock, taken on a central vertical line.

In the drawings, *a* designates the stationary part, and *b* the movable or folding part, of my improved bundle-rack. These parts may be composed of any material and made in any desired form.

As shown in the drawings, the two parts *a* and *b* are of semicylindrical shape, the movable part *b* being pivoted at its ends, as at *c*, upon the ends of the stationary part, the construction and arrangement being such that the movable part may be folded or moved over and back of and below the fixed part, as shown by dotted lines in Fig. 1, to open the rack, and may be folded upon the fixed part, as shown by full lines in the last-mentioned figure, to close the rack.

It is proposed to provide the rack with a key or key-check ejector, so that when it is closed it may be automatically locked and a key or key-check ejected, so that the user may be put in possession of means whereby access may be obtained by him or her to the rack when desired. Various forms of devices may be employed for this purpose. That however, shown in Figs. 3 and 4 and devised by me I consider well suited to the purpose. In said last-mentioned figures, *d* designates a bolt or stud secured to the forward edge of the lid or folding part *b*, which stud is provided with notches *e e* in its sides near its lower end to receive the upper ends of the segmental bolts *f f*, arranged to move in suitable ways or bearings, as shown in Fig. 3, which shows the position of the parts when the rack is locked.

The lower ends of the bolts *f* are adapted to be acted upon by an inverted-V-shaped cam *g*, pivotally connected with the end of a lever *h*, fulcrumed at *i* in the lock and having the lower end of a rod or bar *j* pivoted to its outer end, the upper end of the said rod extending up to near the top of the upper outer edge of the stationary part *a*, so that when the lid *b* is closed the said upper end of the said rod may be engaged and depressed by a stud *k* on the forward edge of the lid causing the lever *h* to be actuated, so as to raise the cam *g*, which, acting upon the lower ends of bolts *f*, will move the same, so as to engage the notches *e* of the lug or bolt *d*.

l designates a socket formed in the movable or cover part, coinciding in position with

the bolt *d*, of such form and size as to permit the insertion therein of an oblong key or key-check *n*, which is formed so that when it is inserted in the slot or socket *l* it may engage the ends of the levers *f* and move the same back out of engagement with the notches *e* of the bolt *d* and contact with the upper end of the cam *g* and depress the same and the lever *h*, raising the bolt *j* and permitting the cover to be opened. After the cover is opened or thrown back the key or key-check *n* may be left in the slot *l* of the lock, its upper end extending below the upper edge of the outer portion of the stationary part, as represented in Fig. 4. In this way the key or key-check when the bundle-rack is open will be in position in the lock out of reach of any person who should be inclined to tamper therewith. Upon the closing of the lid or movable part of the rack the lug *k*, engaging the bar *j*, will actuate the lever *h*, raise the cam-piece *g*, eject the key-check or key *n*, throw the bolts *f* into engagement with notches *e*, as before described, and lock the bundle-rack. When the bundle-rack is open, in order to prevent persons from putting a knife-blade or other article in the slot over the end of the bar *j*, I may provide various means for preventing the bar from being depressed, as shown in the drawings. (See Fig. 1.) The means herein employed consist of a rod *m*, supported in suitable bearings and adapted to be acted upon by an offset *o*, formed on the end of the movable part of the rack, which acts against the spring-pressed rod *m* and forces the same when the lid is open into position under the outer end of the lever *h*, maintaining the said rod in such position until the lid or movable part of the bundle-rack is nearly closed. Other means may, however, be provided for this purpose.

It is obvious that various changes may be made in the form and arrangement of parts comprising my invention without departing from the nature or spirit thereof.

Having thus described the nature of my invention and explained a way of constructing and using the same, though without attempting to set forth all of the forms in which it may be made or all of the modes of its employment, I declare that what I claim is—

1. The improved bundle-rack comprising in its construction a fixed part and a movable part adapted to be closed and locked upon the fixed part and a key or key-check ejector connected with the fixed part, as set forth.

2. The key or key-check ejector consisting of the stud or eyebolt *k*, the lever *h*, and the cam *g*, as set forth.

3. A lock comprising in its construction the stud or bolt *d*, provided with notches *e*, the bolts *f f*, the cam *g*, lever *h*, bar *j*, and stud *k*, as set forth.

In testimony whereof I have signed my name to this specification, in the presence of two subscribing witnesses, this 22d day of April, A. D. 1892.

JAMES M. COTTON.

Witnesses:
MARY M. HUGHES,
FRANCIS M. HUGHES.