(No Model.) 2 Sheets—Sheet 1.

H. SCHUMM.

GAS OR OIL MOTOR ENGINE.

No. 482,202. Patented Sept. 6, 1892.

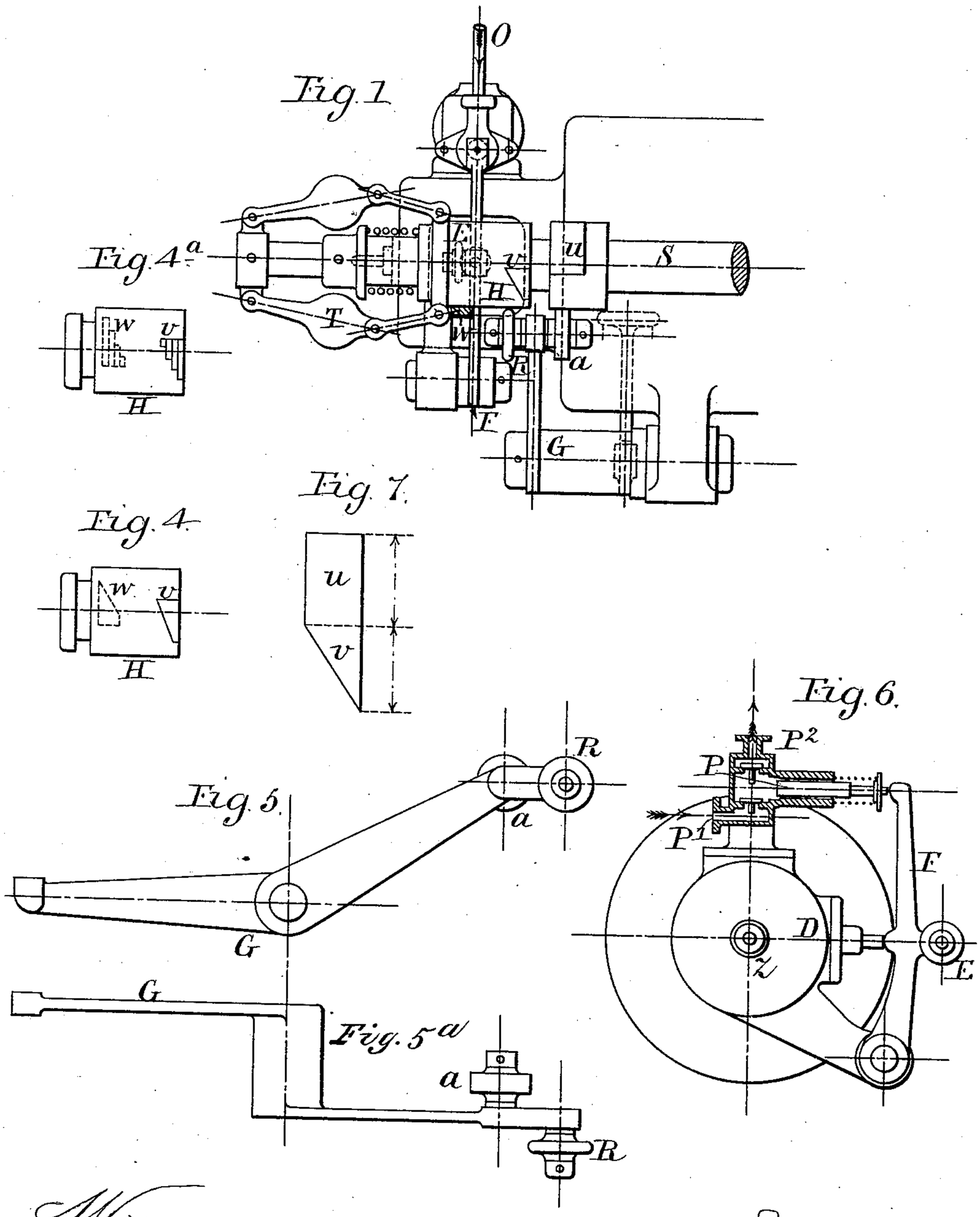

Witnesses:
J. A. Rutherford
Robert Dorrett.

Inventor:
Hermann Schumm.
By James L. Norris.
Attorney

THE NORRIS PETERS CO., PHOTO-LITHO., WASHINGTON, D. C.

(No Model.)

2 Sheets—Sheet 2.

H. SCHUMM.

GAS OR OIL MOTOR ENGINE.

No. 482,202.

Patented Sept. 6, 1892.

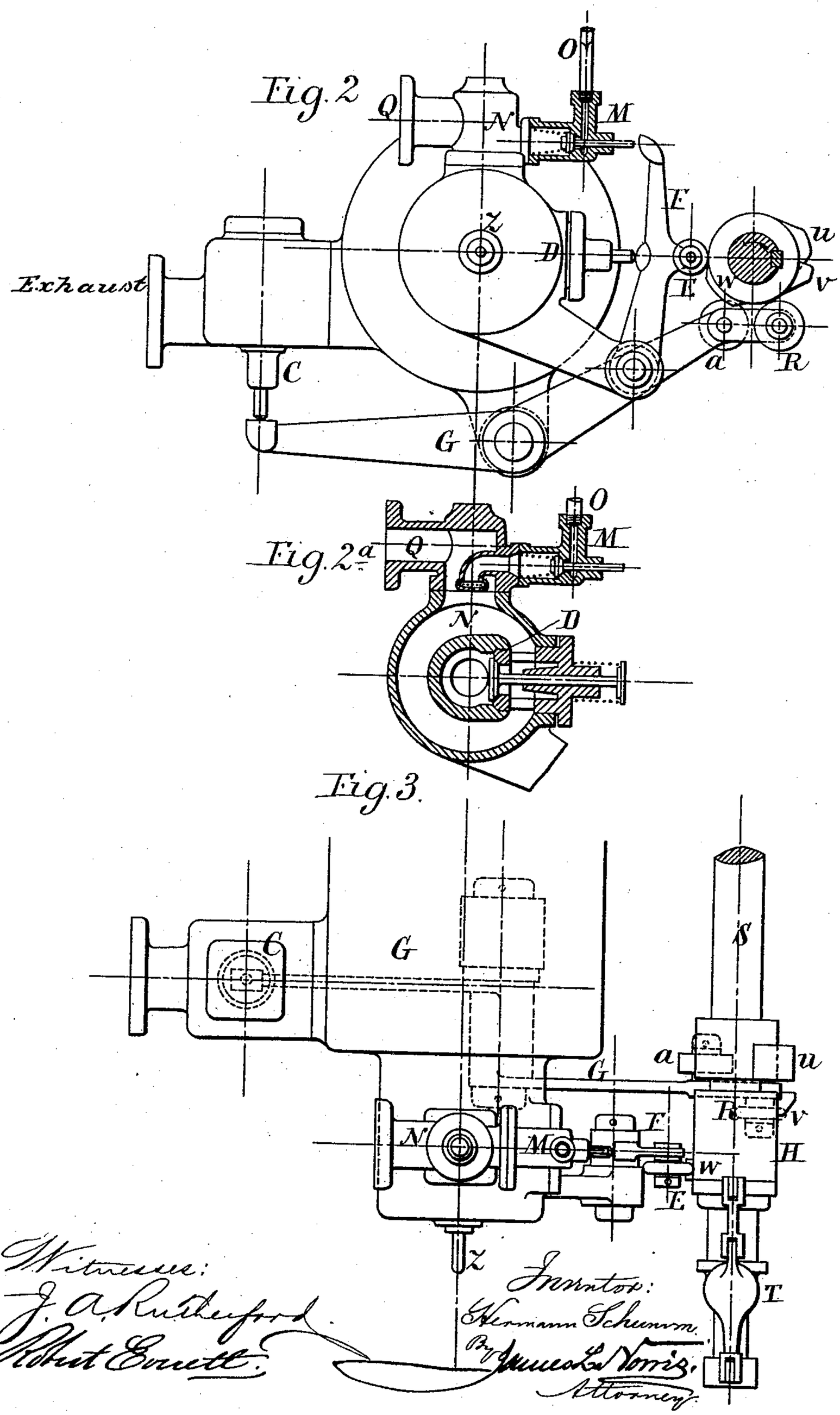

Witnesses:
J. A. Rutherford
Robert Everett

Inventor:
Hermann Schumm
By James L. Norris
Attorney

THE NORRIS-PETERS CO., PHOTO-LITHO., WASHINGTON, D. C.

UNITED STATES PATENT OFFICE.

HERMANN SCHUMM, OF COLOGNE-DEUTZ, GERMANY, ASSIGNOR TO THE GAS-MOTOREN-FABRIK-DEUTZ, OF SAME PLACE.

GAS OR OIL MOTOR ENGINE.

SPECIFICATION forming part of Letters Patent No. 482,202, dated September 6, 1892.

Application filed March 7, 1892. Serial No. 424,055. (No model.) Patented in Belgium February 27, 1892, No. 98,539; in Italy March 19, 1892, LXI, 384, and in Spain March 28, 1892, No. 13,074.

To all whom it may concern:

Be it known that I, HERMANN SCHUMM, a citizen of Switzerland, residing at Cologne-Deutz, in the Empire of Germany, have invented new and useful Improvements in Gas or Oil Motor Engines, (for which I have obtained patents in Belgium, dated February 27, 1892, No. 98,539; in Italy, dated March 19, 1892, Vol. LXI, No. 384, and in Spain, dated March 28, 1892, No. 13,074, and for which I have made an application for patent in Great Britain, which patent when granted will bear date February 11, 1892, No. 2,728,) of which the following is a specification.

For regulating the speed of four-stroke-cycle gas or oil motor engines the method is employed with advantage of drawing back into the cylinder the hot combustion-gases of the previous explosion by the suction-outstroke of the piston when one or more explosive charges are omitted or reduced in volume in consequence of the engine running too fast instead of drawing in cold air. By this means the cylinder is prevented from becoming cooled and the vaporization of the liquid particles when oil is being used is facilitated or the detrimental condensation of such oil-vapor on the cooled sides of the cylinder is prevented. If the engine is regulated by discontinuing the explosive charges for a time, the said combustion-gases have to be drawn into the cylinder during the entire outstroke. The regulation can, however, be effected in a more uniform manner by varying the volume of the explosive charges introduced without intercepting them altogether, and thus to a certain extent proportioning the power produced at each stroke to the power taken off from the engine during such stroke. This is effected according to the present invention in such a manner that during a certain part of the suction-stroke, the extent of which is regulated by a governor, the hot products of the previous explosion are drawn into the cylinder through the discharge-valve, after which on the closing of the discharge-valve explosive mixture is drawn in during the remainder of the suction-stroke through the inlet-valve of the cylinder. The charge of the cylinder will consequently be so constituted under these circumstances that against the piston there will be situated a variable quantity of hot combustion-gases, while the rear end of the cylinder will be filled with a greater or less quantity of explosive mixture. As the charge thus drawn in is always at atmospheric pressure, the degree of compression of such charge by the following compression-stroke will always be constant, so that notwithstanding the existence of a more or less weak explosive charge the reliable ignition thereof will always be insured.

In carrying out the above-described method of operating I combine with the ordinary cam on the way-shaft that effects the opening of the discharge-valve during the expelling-stroke a second cam having a variable dwell for acting upon the discharge-valve during a part of the suction-stroke, and a third cam, also, with variable dwell for acting upon the inlet-valve for explosive mixture during the remaining part of the suction-stroke, such second and third cams being so arranged and controlled by a governor that, according as the speed of the engine rises or falls above or below the normal, the second-named cam is made to hold the discharge-valve open during a greater or less part of the suction-stroke, and the third cam is made to open the inlet-valve at the moment when the second cam allows the discharge-valve to close and to keep it open till the end of such stroke.

The accompanying drawings show an arrangement of the valve-gear which I employ for this purpose.

Figure 1 shows a side view of the rear end of a gas or oil motor engine. Fig. 2 shows an end view; Fig. 2ª, a cross-section through the vaporizing and explosion chambers. Fig. 3 shows a part plan. Figs. 4 and 4ª show detached details of the movable sleeve carrying the variable cams. Figs. 5 and 5ª show a side view and plan of the discharge-valve lever. Figs. 6 shows an end view, partly in section, of a modification of the supply device; and Fig. 7 shows a diagram of a modified form of the cams.

On the way-shaft S, which revolves at half the speed of the engine-shaft, is fixed a sleeve carrying a cam *u*, which acts upon the roller

a of a double-ended lever G, the other end of which acts upon the discharge-valve C during the expelling-stroke in the usual manner. This lever carries, in addition to the roller *a*, a second roller R, which is acted upon during a portion of the suction-stroke by a cam *v* upon a sleeve H, that can slide longitudinally upon but revolves with the way-shaft, which sleeve also carries another cam *w*, that actuates both the admission-valve D of the cylinder and the gas or oil inlet valve M. The cam V is formed with a straight face on its leading side and with a sloping face on its following side, as shown at Figs. 1 and 4, and its position on the sleeve is such that it begins to act on the roller R of lever G with its straight side at the moment when the roller *a* of this lever begins to run off the cam *u*. By this means the discharge-valve C is kept open as long as the roller R is acted upon by the cam *v*. As this cam begins to act upon the roller R at the moment when the working piston commences its suction-stroke, it will be seen that according as the cam acts with a longer or shorter dwell upon the roller R, due to the sloping form of its following side, the lever G will be made to keep the discharge-valve open for a longer or shorter time from the commencement of the suction-stroke, according as the governor T brings for the time being a part of the cam with a longer dwell or one with a shorter dwell in the path of the roller R. The cam *w*, on the other hand, has its leading side formed with an incline, while the following side is formed straight, and it is placed in such a position upon the sleeve H that at the moment when the cam *v* ceases to act upon the roller R, so as to allow the discharge-valve to close, the cam *w* begins to act upon the roller E of a lever F, that acts both upon the inlet-valve D of the engine-cylinder and the inlet-valve M for the gas or oil supply passing in through the pipe O. The following side of the cam *w* is straight and effects the closing of the said valves at the end of the suction-stroke. From this construction it will be seen that the governor T will determine for every degree of power given off by the engine a position for the sleeve H and cam *v*, in which the power produced shall be practically equal to the power taken off, such adjustment being effected without impairing the efficiency of the engine. It will be understood that the valves M and D are in this arrangement held closed by springs of sufficient strength as to prevent their being opened by atmospheric pressure when the piston commences its suction-stroke. The air-supply enters into the vaporizing-chamber N through the branch Q and mixes with the gas or petroleum-spray in passing through the chamber N to the inlet-valve D.

The cylinder-charges produced by the above-described mode of operating, being stratified in the manner hereinbefore set forth, will enable a greater utilization of the heat developed by the combustion of the charges to be effected, and will also insure a perfect reliableness in the firing of the charges, even for the smallest combustible charges that may be admitted.

The cams *v* and *w*, instead of being made with sloping sides, as described, may of course be made with stepped sides, as indicated at Fig. 4[a]; also, the construction might be somewhat simplified by dispensing with the fixed sleeve carrying the cam *u* and forming the latter in one with the cam *v* on the movable sleeve H, as indicated in the diagram at Fig. 7, by which arrangement the roller A on lever G would be dispensed with. The arrangement would, however, have the disadvantage that in that case the governor could only effect the adjustment of the sleeve H and its cams during the working and compression strokes, whereas with the previously-described arrangement such adjustment could also be effected during the expelling-stroke.

When the engine is worked by means of petroleum or similar oil, this may either be supplied at the requisite pressure from an overhead tank through pipe O, as at Fig. 2, or when the liquid has to be supplied from a lower level the arrangement shown at Fig. 6 may be employed, in which, in place of acting on an inlet-valve, the lever F is made to actuate the plunger of a small force-pump P, which draws in petroleum at P′ and expels the same at P^2, whence it passes to the spraying-nozzle in an evaporating and mixing chamber of any suitable known construction communicating with the inlet-valve D of the cylinder.

Having thus described the nature of this invention and the best means I know of carrying the same into practical effect, I claim—

In a four-stroke-cycle gas or oil motor engine, the combination, with the ordinary cam, such as *u*, for opening the discharge-valve during the expelling-stroke, of two cams, such as *v* and *w*, that are controlled by the engine-governor, of which the one cam *v*, which is formed with a sloping face on its following side, so as to have a variable dwell, is also made to act upon the discharge-valve so as to hold it open for a longer or shorter space of time during the first part of the suction-stroke, while the second cam *w*, which is formed with a sloping face on the leading side, acts upon the inlet valve or valves for the explosive charge of the cylinder, also with a variable dwell, so as to open this or these as soon as the before-mentioned cam allows the discharge-valve to close and to hold it or them open until the end of the suction-stroke, substantially as described.

In testimony whereof I have signed my name to this specification, in the presence of two subscribing witnesses, this 24th day of February, A. D. 1892.

HERMANN SCHUMM.

Witnesses:
SIBILLA LANG,
H. A. MAXWELL.