(No Model.)

# J. MENGE.

## ROTARY PUMP.

No. 480,473. Patented Aug. 9, 1892.

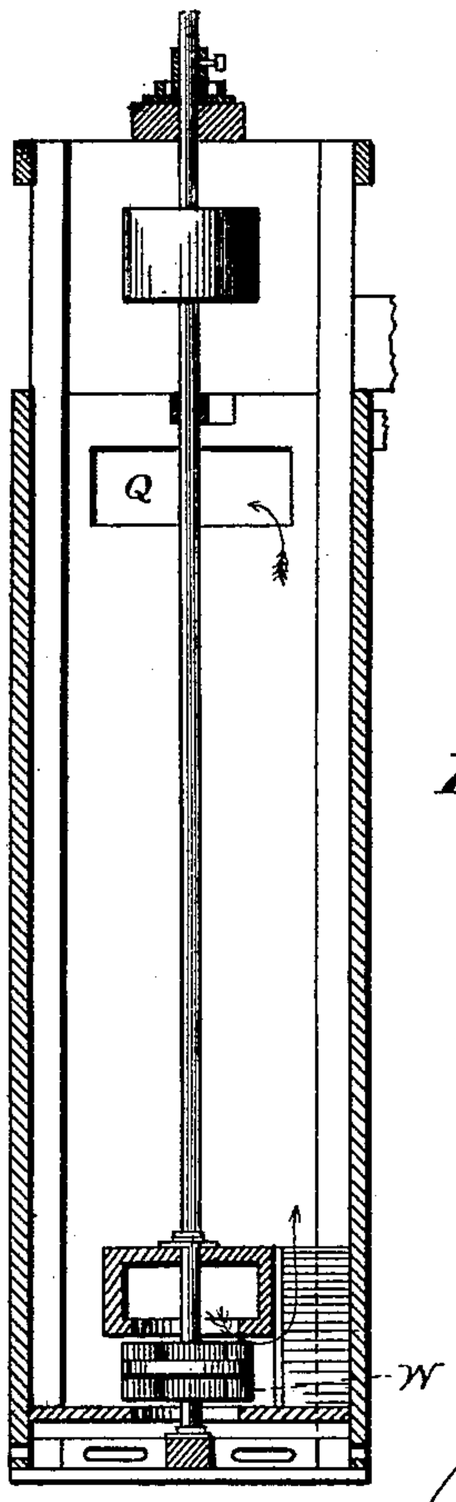


Fig. 1.

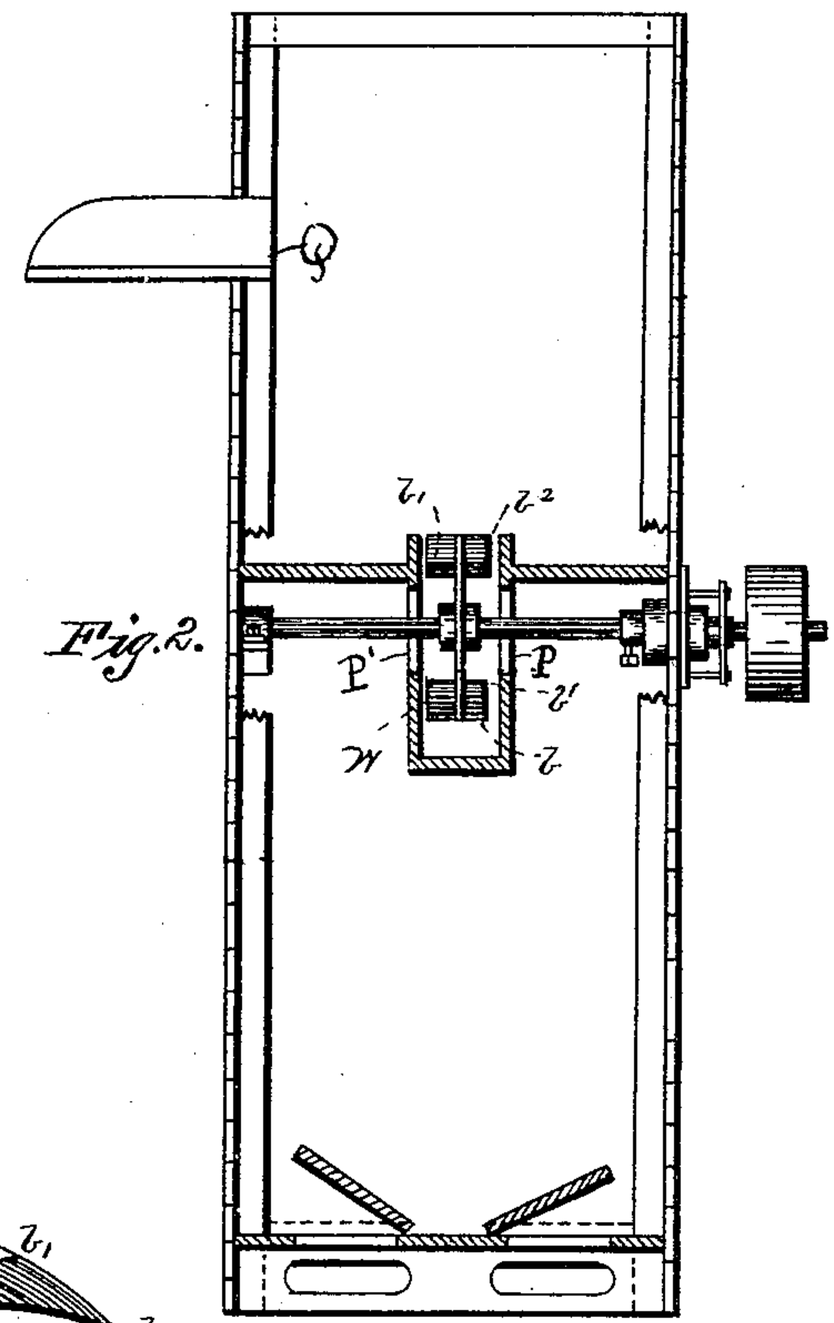


Fig. 2.

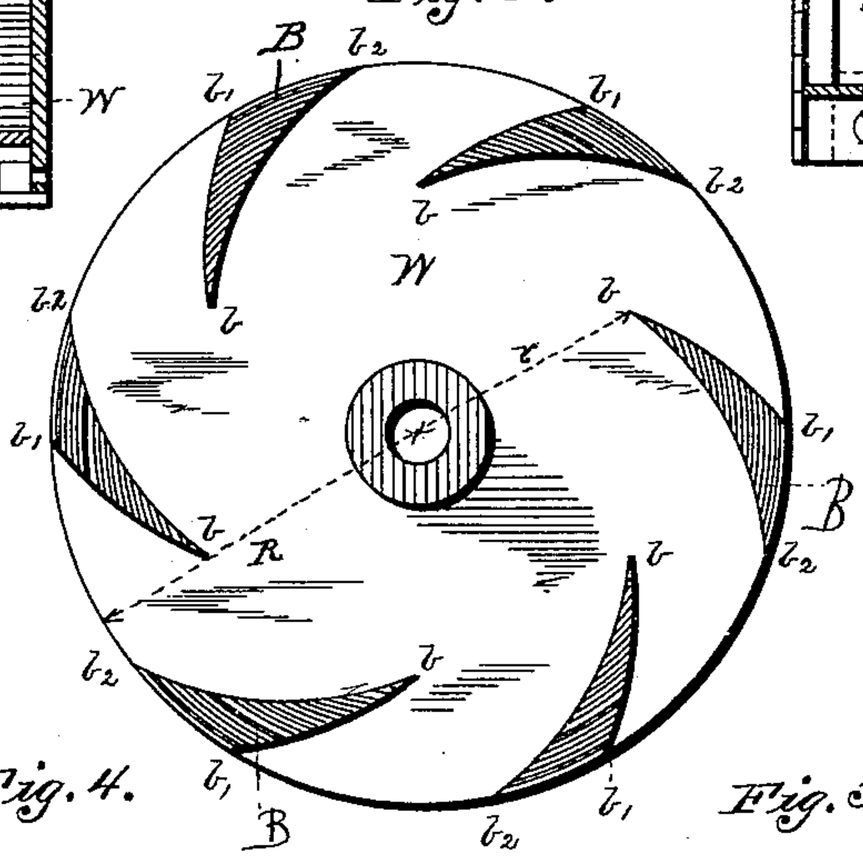


Fig. 3.

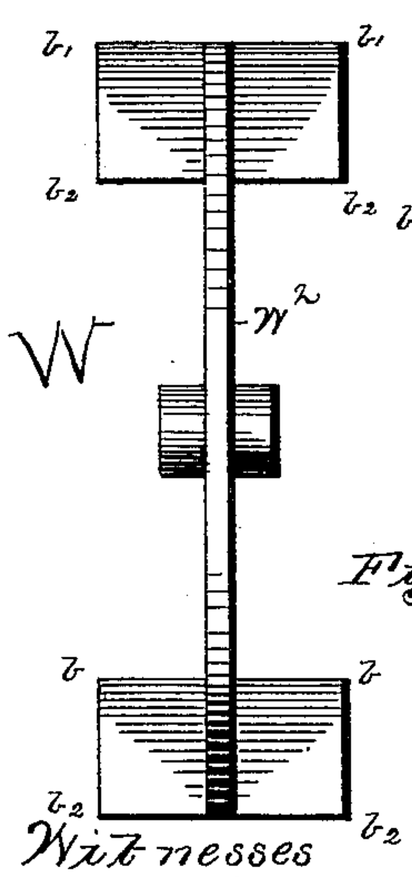


Fig. 4.

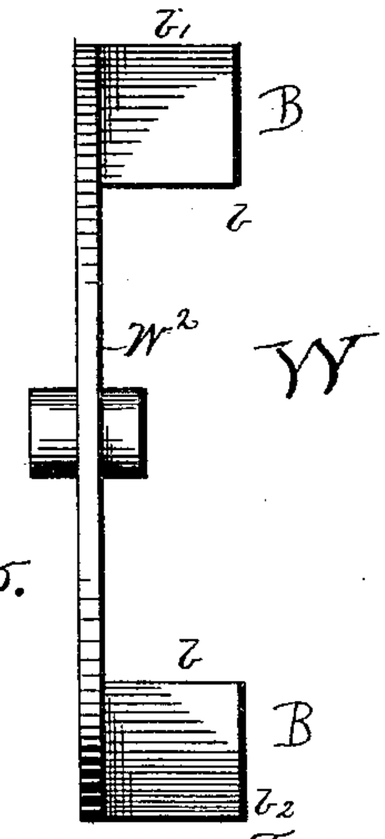


Fig. 5.

Witnesses
M. B. Harris
J. C. Wilson

Inventor
Joseph Menge
by
Whitman & Wilkinson
Attorneys.

THE NORRIS PETERS CO., PHOTO-LITHO., WASHINGTON, D. C.

# UNITED STATES PATENT OFFICE.

JOSEPH MENGE, OF NEW ORLEANS, LOUISIANA.

## ROTARY PUMP.

SPECIFICATION forming part of Letters Patent No. 480,473, dated August 9, 1892.

Application filed April 22, 1891. Serial No. 390,028. (No model.)

*To all whom it may concern:*

Be it known that I, JOSEPH MENGE, a citizen of the United States, residing at New Orleans, in the parish of Orleans and State of Louisiana, have invented certain new and useful Improvements in Rotary Pumps; and I do hereby declare the following to be a full, clear, and exact description of the invention, such as will enable others skilled in the art to which it appertains to make and use the same.

My invention relates to improvements in rotary pumps; and it consists of certain novel features in the construction of the wheels or so-called "rotary pistons" used in said pumps, which features will be understood after reference to the accompanying drawings.

The same parts are indicated by the same letters.

Figure 1 represents a vertical section of one form of rotary pump, showing my improved wheel in a horizontal position. Fig. 2 represents a vertical section of another form of pump, showing my improved wheel in a vertical position. Fig. 3 represents a plan view of my improved wheel, showing one side of the disk and one set of blades or vanes. Fig. 4 represents a view at right angles to the axis of the wheel, showing two sets of blades, the said sets being on either side of a central disk. For the sake of clearness only four of the twelve blades are shown in this figure. Fig 5 is a similar view to that described in Fig. 4, but showing blades on one side of the disk only.

The pump shown in Fig. 1 is that known as the "Menge" pump, and is described in Letters Patent to me, No. 421,415, dated February 18, 1890; reissued December 29, 1891, No. 11,214.

The pump shown in Fig. 2 is fully described in my application, Serial No. 392,123, filed May 8, 1891.

P and P′ are the suction-ports, and Q and Q′ are the discharge-openings.

W is the wheel, and the flow of water is indicated by the direction of the arrows. The wheel W consists of a disk $W^2$ and a plurality of blades B, symmetrically disposed on either or both faces of the said disk. These blades may be cast integral with or otherwise attached to the said disk. It will be noted that these blades have no plate or disk on the outer flat edges, but that they are entirely open axially and radially. Moreover, the said blades are situated only in the part of the wheel having the greatest velocity—that is, near the periphery. Since there is no outer disk around which the water would tend to regurgitate if the said disk did not fit closely, it is not necessary to have the surface of the wheel make a close point with the retaining suction-box. I usually give the rotating blades a clearance of from three-eighths to five-eighths of an inch. This leaving open passages axially as well as radially and placing the cutting-blades where they do the most work, greatly diminish friction and tend to economy in the operation of the pump. With blades on each side of the said disk, as shown in Fig. 4, the wheel is intended for double or balanced suction. With blades only on one side, as in Fig. 5, it can be used for single or unbalanced suction, or with right and left wheels on the same shaft it can also be used for double or balanced suction. The blades B are flat projections on the disk and are preferably bounded by three curved surfaces perpendicular to the said disk. These blades are so constructed that the distance between two consecutive cutting-edges $b$ and $b$ is equal to that between the discharge edges $b'$ $b^2$, or, in other words, so that the discharge area may equal the cutting area.

The plan of the piston may be readily laid down after a simple calculation: Calling the radius of the exterior circle of the blades R and that of the interior or cutting circle $r$ and the numbers of blades $n$, then the circumference of the interior or cutting circle should be divided into a number of open spaces each including an arc $\frac{2\pi r}{n}$ long, while the outer circle will be divided into a number of arcs of the same length separated from each other by arcs $\frac{2\pi(R-r)}{n}$, since $\frac{2\pi(R-r)}{n}+\frac{2\pi r}{n}=\frac{2\pi R}{n}$. This length, expressed by $\frac{2\pi(R-r)}{n}$, separating the discharge-openings, then becomes the length of the exterior curved face of the blade. The other two curved faces meet in a point, whose position is dependent upon the pitch of the blades on

the interior or cutting circle. By having the sum of the cutting-spaces equal to the sum of the discharge-spaces there is no wedging of water on the cutting area, nor is there any drag on the delivery end of the blades. If the space $b$ $b$ were greater than $b'$ $b^2$, then there would be a choking outflow. If less, there would be a cramped flow from the cutting-edge and a dragging outflow from the discharging area of the wheel.

After many experiments I am convinced that with a given pitch a wheel constructed in the manner herein shown gives the greatest discharge of water with the least power applied.

Having thus described my invention, what I claim, and desire to secure by Letters Patent of the United States, is—

1. In a wheel for a rotary pump, the combination, with a disk, of a plurality of flat blades open axially and radially mounted near the periphery and on each side of said disk, the sides of said blades forming curved channels of practically uniform cross-section, substantially as described.

2. In a wheel for a rotary pump, the combination, with a disk $W^2$, of a plurality of flat blades B, open axially and bounded by three curved surfaces and mounted on the said disk, said blades having the distance between the cutting-edges $b$ equal to the distance between the discharge-edges $b'$ and $b^2$, the sides of said blades forming curved channels for the water practically uniform in cross-section, substantially as described.

3. In a wheel for a rotary pump, the combination, with a disk $W^2$, of a plurality of flat blades B, open axially and bounded by three curved surfaces and mounted on each side of the said disk, said blades having the distance between the cutting-edges $b$ equal to the distance between the discharge-edges $b'$ and $b^2$, the sides of said blades forming curved channels for the water practically uniform in cross-section, substantially as described.

In testimony whereof I affix my signature in presence of two witnesses.

JOSEPH MENGE.

Witnesses:
T. B. LYND,
JNO. J. WARD.