(No Model.)

SAMUEL P. CROSWELL, 2d, now SAMUEL P. CROSWELL.

SET BOWL OR WASH BASIN.

No. 447,232. Patented Feb. 24, 1891.

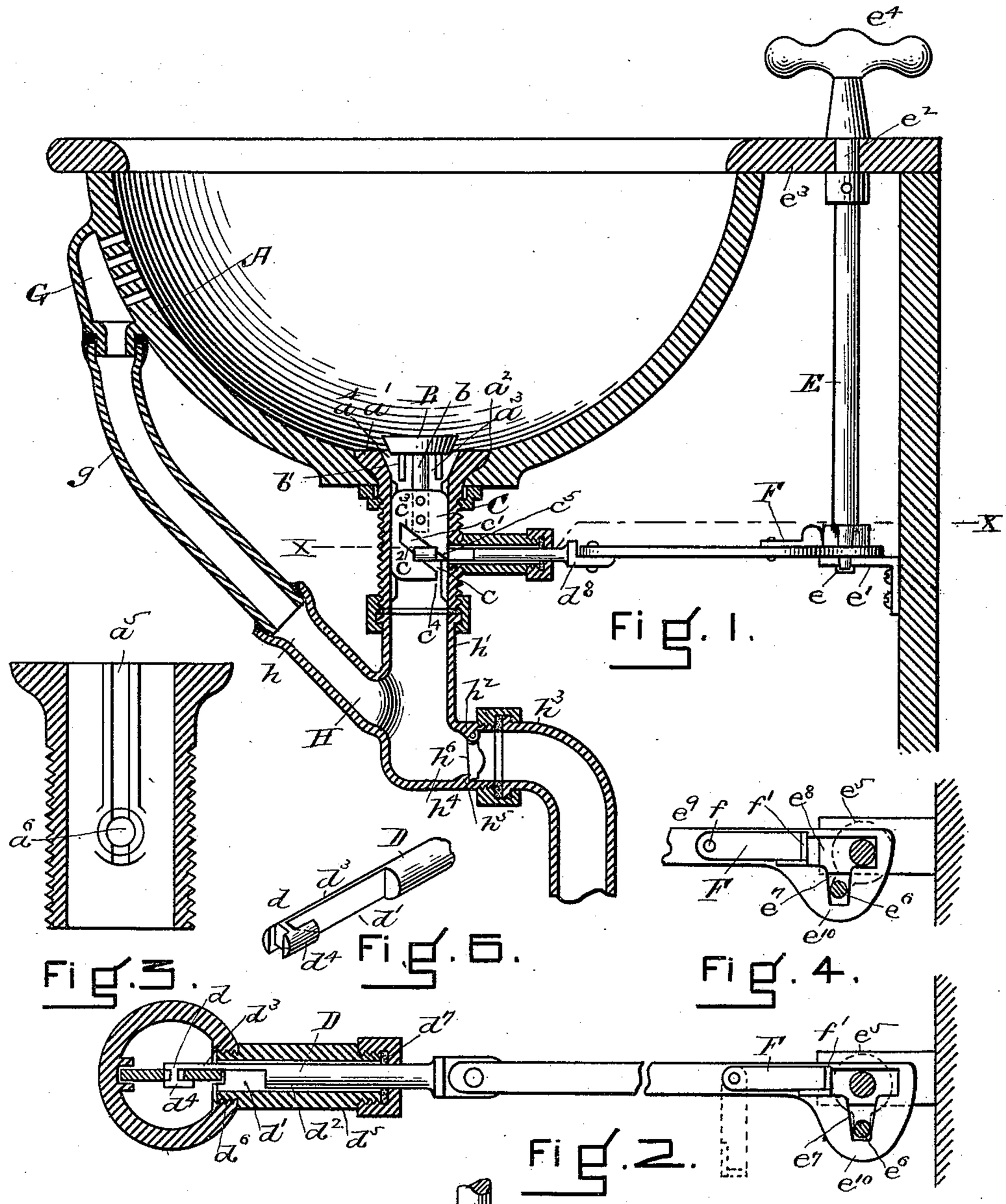

Fig. 1.

Fig. 5.

Fig. 6.

Fig. 4.

Fig. 2.

Fig. 3.

WITNESSES

J. M. Dolan

Chas. L. Ellis

INVENTOR

Samuel P. Croswell 2d

by his attys

Clarke & Raymond

THE NORRIS PETERS CO., PHOTO-LITHO., WASHINGTON, D. C.

UNITED STATES PATENT OFFICE.

SAMUEL P. CROSWELL, 2D, (NOW SAMUEL P. CROSWELL,) OF WEST MEDFORD, MASSACHUSETTS.

SET BOWL OR WASH-BASIN.

SPECIFICATION forming part of Letters Patent No. 447,232, dated February 24, 1891.

Application filed August 21, 1890. Serial No. 362,680. (No model.)

To all whom it may concern:

Be it known that I, SAMUEL P. CROSWELL, 2d, of West Medford, in the county of Middlesex and the State of Massachusetts, a citizen of the United States, have invented a new and useful Improvement in Set Bowls or Wash-Basins, of which the following is a full, clear, and exact description, reference being had to the accompanying drawings, forming a part of this specification, in describing its nature.

The invention relates to a set bowl or basin, having an outlet and a stopper for said outlet and mechanism for operating said stopper, formed to open and close said passage, adapted to be operated from without the bowl.

It further relates to a set bowl or basin having a water-escape passage opening from its bottom, an overflow-passage opening from its side and joining with a direct-escape passage, and a check-valve located or arranged to close both passages.

It further relates to a set bowl or basin having a fixture of a peculiar shape adapted to receive the direct-escape connection and the waste-connection, and having also a horizontal outlet to a single waste-pipe in which is arranged a check-valve.

It further relates to a check-valve of peculiar construction and application for use in connection with said bowl fixtures of the kind specified.

Referring to the drawings, Figure 1 is a view in vertical central section of a set bowl having the features of my invention. Fig. 2 is a view in horizontal section upon the dotted line X X, of Fig. 1, and in plan of some of the parts below said line. Fig. 3 is a view, enlarged in vertical section, of a portion of the main outlet-pipe to show one of the guideways of the stopper and also the opening to the passage in which the device for moving the stopper plays. Fig. 4 is a detail view in plan of a stop, to which reference will hereinafter be made. Fig. 5 is a perspective view of the stop to further illustrate its use. Fig. 6 is a view in perspective of the end of the spindle operating the stopper.

A represents the bowl. a is a pipe, the upper end a' of which enters the hole a^2 in the bottom of the basin and is secured to the basin in the ordinary way. The hole or passage a^3 in said pipe forms the main waste-outlet of the bowl, and the upper end or a^4 is inclined or beveled outwardly, as represented in Fig. 1, to form a seat for the stopper B. In the pipe a there are the guide-recesses a^5 opposite to each other, and one of which is on a line with the opening a^6 to the pipe. In these guides there is arranged to slide a slide-plate C. This slide-plate span is thin, extends across the passage a^3, and its edges enter the guides a^5. This provides for a water-way on each side of the plate. The plate also has extending from its lower corner c upwardly across the plate the slideway c', the edges c^2 c^3 of which are inclined to a horizontal plane and form wedges. In this passage c there is arranged to be moved horizontally the end d of a spindle D, the spindle being cut away at d' between the end d and the section d^2, and upon one side to leave the section d^3 and the ear d^4, which is wider than the recess c, and which is separated from the section d^3 by a space of sufficient width to receive the plate C.

The spindle D is guided and held by a sleeve or section of pipe d^5, which is screwed into a screw-hole d^6 in the side of the pipe a, the inner end of which may have a recess in continuation of the guide a^5 upon its side. The sleeve also has a packing or stuffing box d^7, (see Fig. 2,) for the spindle D. The spindle is provided with a horizontal movement in any desired way. I have represented it as moved by a shaft E, having a lower bearing e in the bracket e', an upper bearing e^2 in the table or slab e^3 about the bowl, and which shaft also has a turn-handle e^4 above the slat e^3. The shaft has at its lower end a crank e^5, having a crank-pin e^6, which enters an arm e^7 of the T-hole e^8 in the pitman or connecting-rod e^9, which connects the crank-pin with the outer end d^8 of the spindle D. (See Figs. 1 and 2.)

The shaft E extends through a section of the T-hole e^8, which section of course must be of sufficient length to permit the pitman to be moved the necessary extent of throw to properly operate the spindle D. The outer end e^{10} of the pitman rests upon the surface of the bracket e'.

To lock the slide C in the escape-passage e^3,

so that the stopper B may not be withdrawn unless it is desired, I have placed upon the pitman a stop F, pivoted at f to the pitman and arranged to extend over the portion of the T-hole e^8, through which the shaft E extends, so that the movement of the crank e^6, withdrawing the spindle D is stopped when the end f' of the stop comes in contact with the shaft E, as represented in Fig. 5. This prevents the end d of the spindle from being entirely withdrawn from the slideway c' of the plate C, and consequently it then acts as a stop for preventing the stopper and plate from being withdrawn from the passage. If it is desired to withdraw stopper and plate from passage, then the stop F is turned from the position represented in Figs. 2, 4, and 5 to the position represented by the dotted outline in Fig. 2, and this permits the crank to move the spindle D still farther outward and sufficiently to cause the end d to be moved free from the slide-plate C.

To insure the ready placing of the plate C in the passage, I have cut away the lower corner c^4, as represented in Fig. 1. This permits the end d of the spindle to be moved slightly into the passage and the slide-plate to be dropped upon it, the corner c^4 passing its outer edge, while the section c^5 bears upon it. This shows the entrance to the passage c' is in line with the end d of the spindle.

In operation the inward movement of the spindle causes this end d to be moved horizontally in the slide-passage c', thereby causing the slide and stopper to be moved vertically in the passage upward or downward, according as the spindle is moved. The stopper B is secured to the slide-plate by a stem d, extending from the center of its lower surface to the slide-plate to which it is riveted or otherwise attached, and it may also have in addition guide-pins b'. Its edge is beveled to fit the bevel a^4 of the seat. I do not confine myself, however, to the special means herein described for communicating motion to the spindle D, although I prefer it as being one of the most satisfactory; but it is obvious that there are many other ways of communicating such motion to the spindle from without the basin. The bowl A also has the overflow-outlet G. This is connected by a pipe g with the fixture H, the fixture having an inclined branch h, which receives the pipe g from the overflow, and also the straight section h', which receives the main outlet-pipe a. These two branches unite, as represented in Fig. 1, and there also extends from the fixture the horizontal section or branch h^2, which is adapted to be secured or attached to the main waste-pipe h^3. The branch h^2 is comparatively short, and in its passage h^4 there is driven a ring h^5, of a size to tightly fit the passage, and to the upper end of which is hinged to swing outwardly and upwardly a clapper or check valve h^6, the weight of which holds it in a vertical position in the passage and closes the passage as against an upward or inward pressure therein, while it opens automatically to any outward and downward pressure upon it. By making the fixture of this shape and arranging this check-valve where indicated, it serves to automatically close both the direct passage from the bowl and the overflow-passage, and by making it attached to a ring of a size requiring to be driven into the passage of the branch h^2 of the pipe a ready and cheap method of securing it in place to the fixture is obtained.

The advantage of the invention arises from the ability to open and close the discharge-passage from without the basin without putting the hand in the water of the basin; also, from the simple and cheap manner in which the movement is imparted to the stopper of the basin; also, from the construction of the mechanism whereby the stopper and its attachment are easily removed from the outlet-passage, thereby giving the passage its full capacity and enabling it to be quickly cleansed; also, from the construction of the fixture whereby a single valve serves to automatically seal both the direct escape-passage and the overflow-passage.

Having thus fully described my invention, I claim and desire to secure by Letters Patent of the United States—

1. A set bowl or basin having a direct-escape passage from its bottom formed by a pipe and ways in the pipe for the guidance of a slide-plate, said slide-plate having an inclined slideway across it, a stopper fastened to the slide-plate, and a slide movable from without the escape-passage across in said inclined slideway in the slide-plate, as and for the purposes described.

2. A set bowl or basin having the direct-discharge pipe a, the slide-plate C in the passage of said pipe, the stopper connected with said slide-plate, the inclined slideway in said plate, and the horizontally-movable spindle formed with the T end d^4, which laps upon the slide and serves to secure it to the spindle, as and for the purposes described.

3. In a set bowl or basin, the outlet-pipe a and slide-plate c^3 to slide in the bore of said pipe, controlled by simple guides, and a stopper attached to said slide-plate, having the inclined slideway and operating-spindle, the end of which enters said slideway and the side of which is cut away at d' to form a recess for a portion of the slide-plate and also the T d^4, as and for the purposes described.

4. A basin having the escape-pipe a, the bore of which has guides for a slide-plate C, said slide-plate C, having an inclined slideway c', stopper B, secured to the slide-plate, the lower corner of the slide-plate being cut away at c^4, and the slide or end d of a slide-spindle, as and for the purposes described.

5. A set bowl or basin having an outlet-pipe and slide-plate in the outlet-pipe, a stopper secured to the slide-plate, an inclined slideway in the slide-plate, a spindle having a section entering said slideway; and means for vary-

ing the extent of outward movement of the spindle, whereby it is caused to be used both as a stop in preventing the withdrawal of the stopper and slide and also to permit by its further movement the withdrawal of the stopper and slide, as and for the purposes specified.

6. In a set bowl or basin having an outlet-pipe, a stopper for controlling the passage therein, a slide-plate in said passage, to which the stopper is secured, an inclined guideway in said slide-plate, a sliding spindle having a section to enter the said guideway, a shaft having a crank, and a pitman connecting the crank-pin of said crank with the spindle, as and for the purposes described.

7. In a set bowl or basin having an outlet-pipe, a stopper for controlling the passage therein, a slide-plate in said passage, to which the stopper is secured, an inclined guideway in said slide-plate, a sliding spindle having a section to enter the said guideway, a shaft having a crank, and a pitman connecting the crank-pin with the slide, having a T-shaped slot at its outer end, one arm of which receives the crank-pin, the other arm the operating-shaft, and a stop F.

SAMUEL P. CROSWELL, 2D.

Witnesses:
F. F. RAYMOND, 2d,
J. M. DOLAN.