(No Model.)

H. M. AUERSWALD.

HORSE COLLAR FASTENING.

No. 435,722. Patented Sept. 2, 1890.

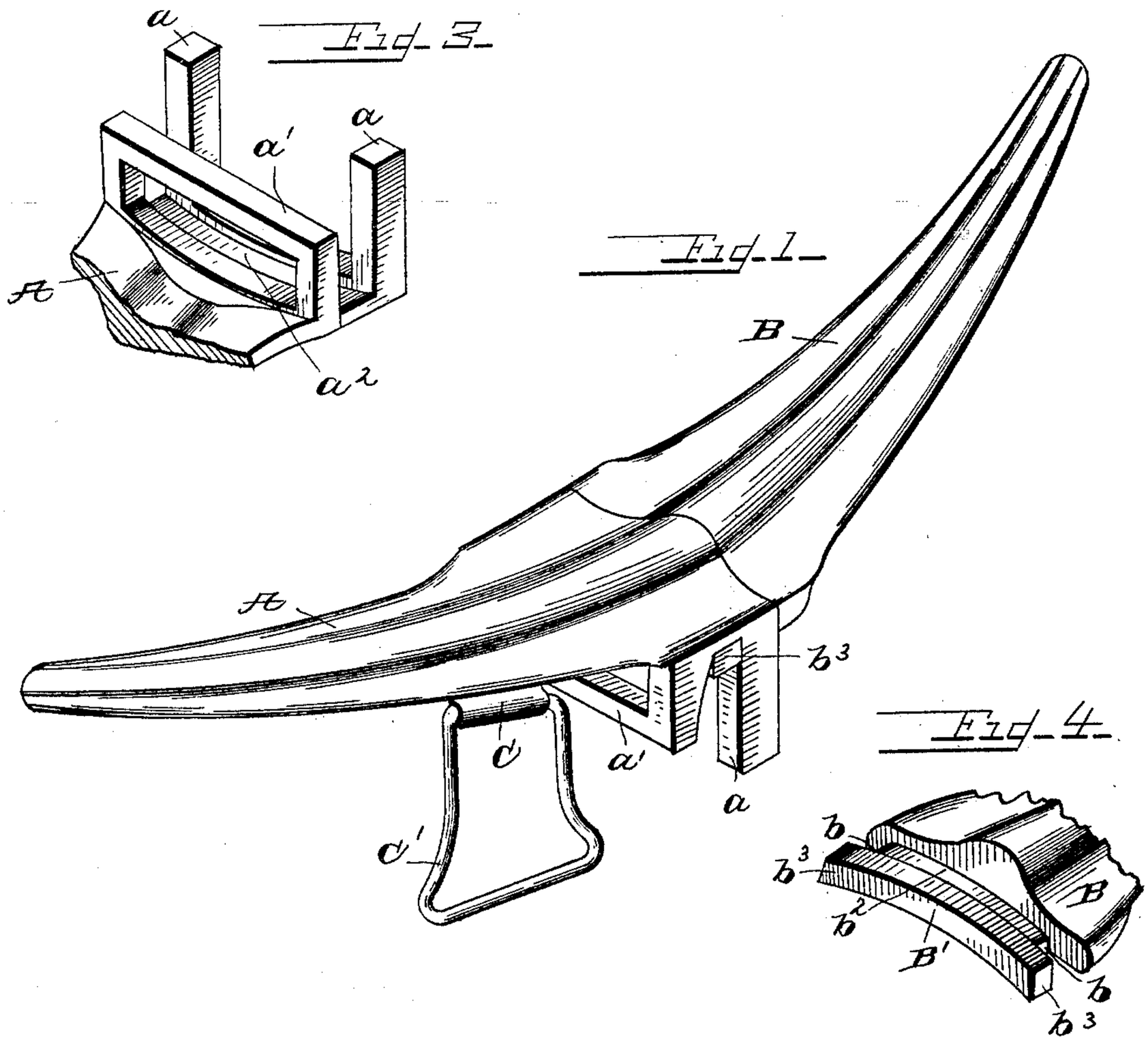

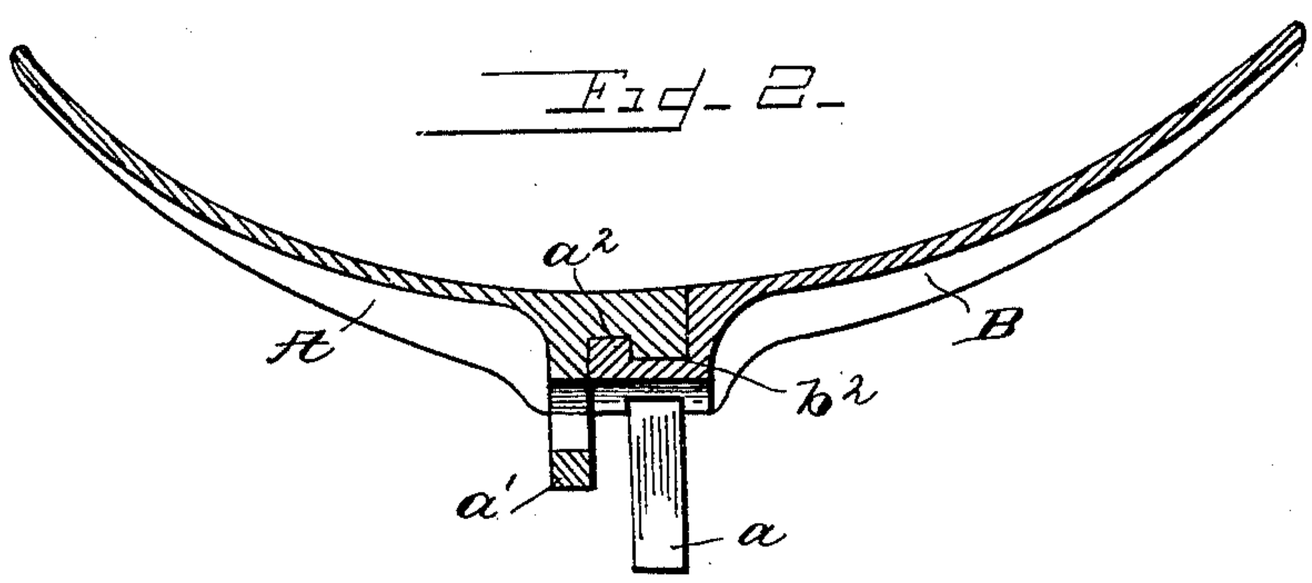

Witnesses

G. A. Tauberschmidt,

C. F. Bell.

Inventor

Herman M. Auerswald

By his Attorney

Edwin S. Clarkson

THE NORRIS PETERS CO., PHOTO-LITHO., WASHINGTON, D. C.

UNITED STATES PATENT OFFICE.

HERMAN M. AUERSWALD, OF ST. JOSEPH, MISSOURI.

HORSE-COLLAR FASTENING.

SPECIFICATION forming part of Letters Patent No. 435,722, dated September 2, 1890.

Application filed June 14, 1890. Serial No. 355,441. (No model.)

To all whom it may concern:

Be it known that I, HERMAN M. AUERSWALD, a citizen of the United States, residing at St. Joseph, in the county of Buchanan and State of Missouri, have invented certain new and useful Improvements in Horse-Collar Fastenings; and I do hereby declare the following to be a full, clear, and exact description of the invention, such as will enable others skilled in the art to which it appertains to make and use the same.

My invention relates to an improvement in horse-collar fastenings designed to be applied to horse-collars which open at their lower ends, or with a slight change in curvature, may be applied to collars which open at their upper ends. It may be used also as a breast-strap fastener where it is desired to apply the breast-strap quickly.

The object of my invention is to form an easily-operated and efficient locking device; and with these ends in view my invention consists in the parts and combinations of parts, as will be more fully described, and pointed out in the claim.

In the accompanying drawings, Figure 1 is a perspective view of my improved horse-collar fastener. Fig. 2 is a central longitudinal cross-section through the same. Fig. 3 is a detached view of the locking end of one of the plates. Fig. 4 is a similar view of the other plate.

A and B are two metal plates of tapering form, curved to correspond to the bend of the collar and adapted to be fastened by rivets, screws, stitching, or other well-known means to the open ends of the collar. The plate A is provided upon its inner end with two uprights or guards a a and a loop a'. Between the loop a' and uprights or guards a a is a slot a^2, of suitable depth, to be hereinafter referred to.

C is a device secured to the plate A a slight distance back of the loop a', in which is secured a loop C′, adapted to receive the martingale or neck-yoke strap.

The plate B is provided on its inner end with a T-shaped projection B′, forming recesses b b. The top of this projection is grooved, as at b^2. b^3 are projections.

The method of securing these two plates together is as follows: The plates being secured to the collar in a desirable way, the uprights or guards a a are passed back of projections b^2 b^3 and in recesses b b and pushed home. The hame-strap, being secured to the hames, is passed between the guards a a, then through the loop a', then through the hame-loop, then back over loop C, between guards a a, and buckled. If preferred, the loop a' may be dispensed with. Thus it will be seen that I form a simple, easily-operated, and efficient locking device for horse-collars and breast-straps.

It is evident that many slight changes and alterations may be made in the relative construction and arrangement of parts without departing from the spirit of my invention, and hence I would have it understood that I do not confine myself strictly to the parts herein described.

Having fully described my invention, what I claim as new, and desire to secure by Letters Patent, is—

In a collar-fastening, the two plates A and B, having, respectively, the T-shaped projection, the uprights or guards, the loop adjacent to said guards, a groove between said guard and loop, and the metal ring or loop C′, secured to the plate A by means of the device C, substantially as described.

In testimony whereof I affix my signature in presence of two witnesses.

HERMAN M. AUERSWALD.

Witnesses:
R. F. ASKREN,
GEO. E. LAPORT.