(No Model.)

S. ROSS, Jr.

SHOE UPPER TURNING AND BEADING MACHINE.

No. 432,902. Patented July 22, 1890.

Fig. 1.

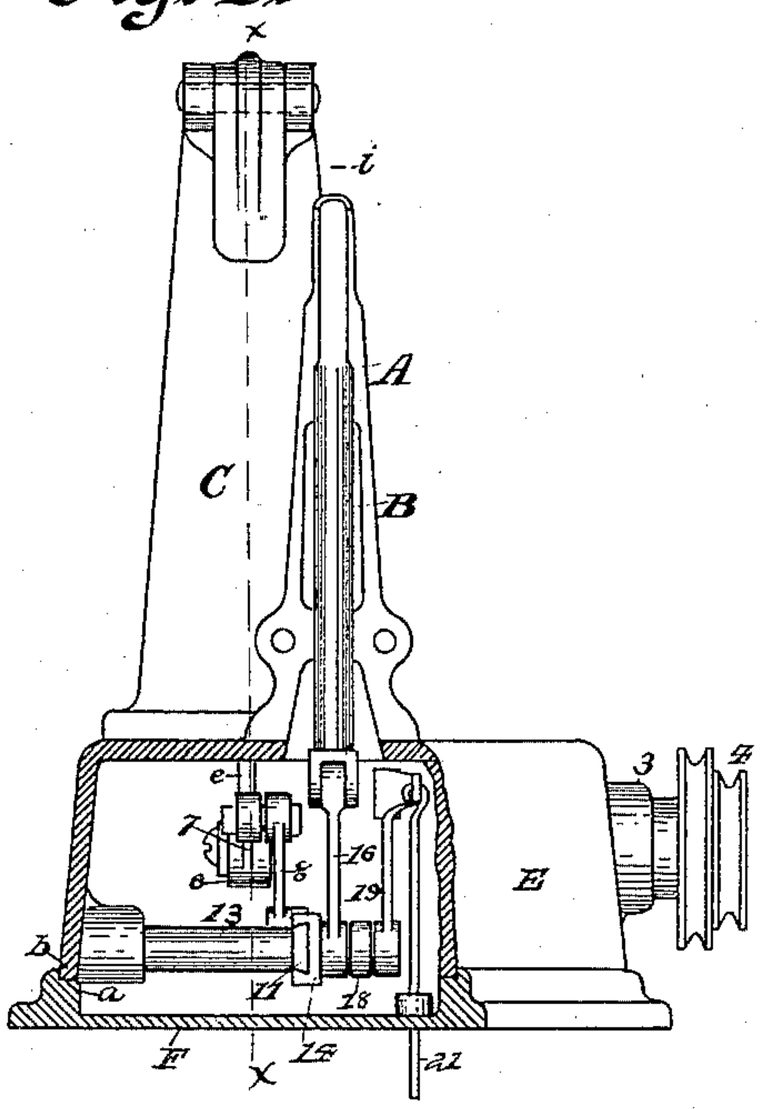

Fig. 2.

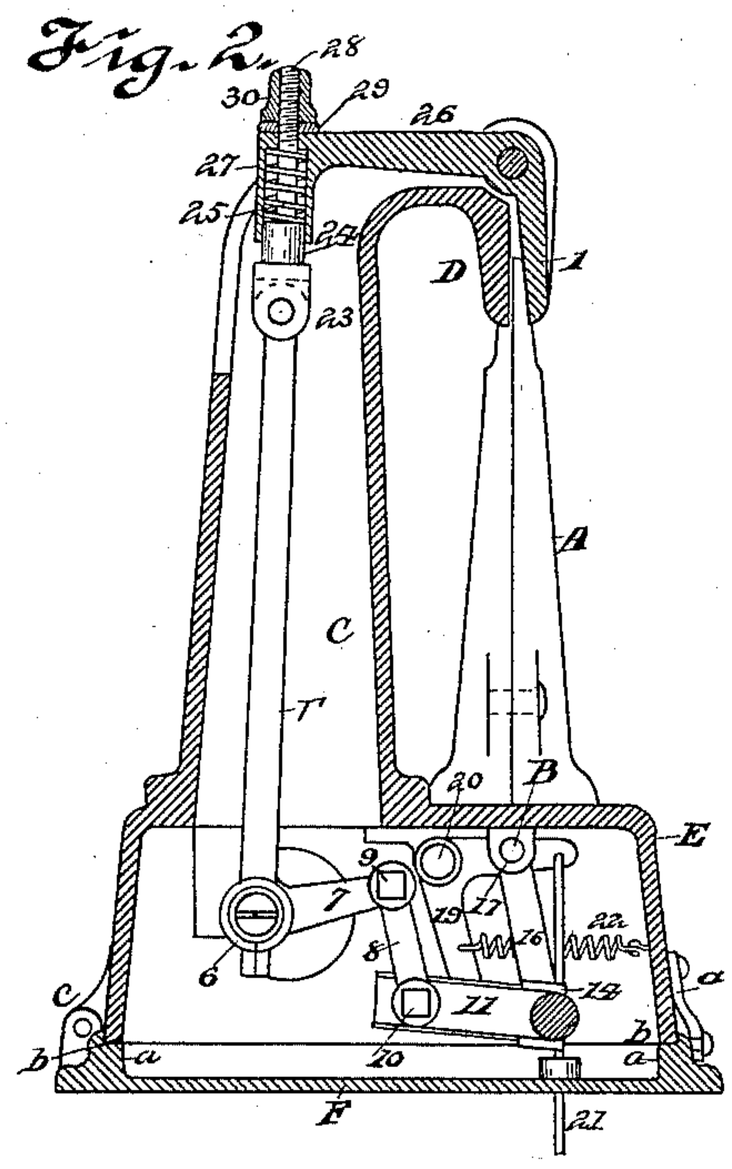

Fig. 3.

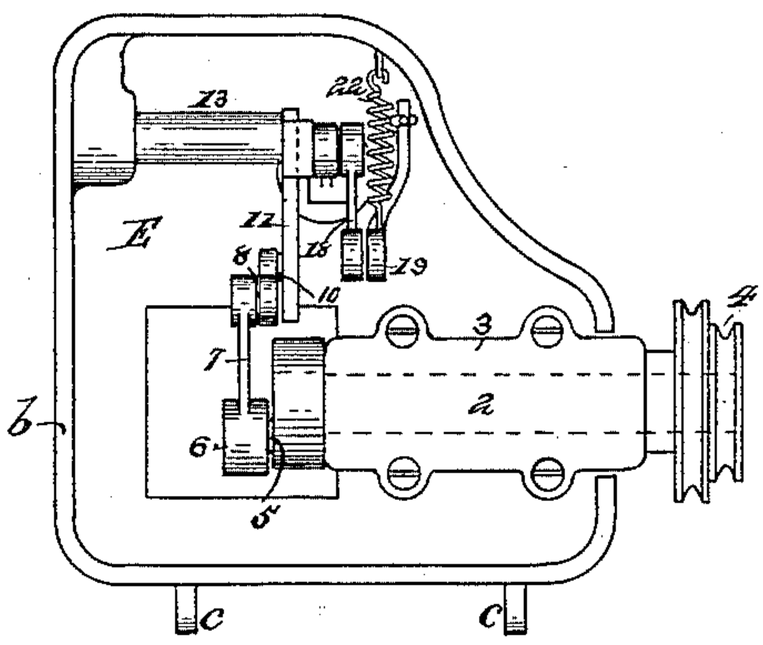

Fig. 4.

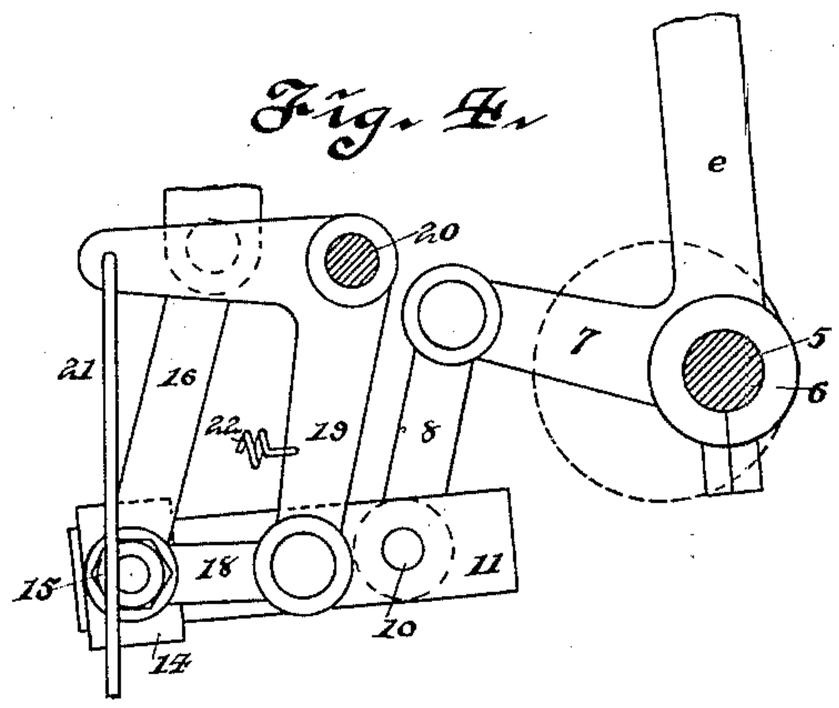

Fig. 5.

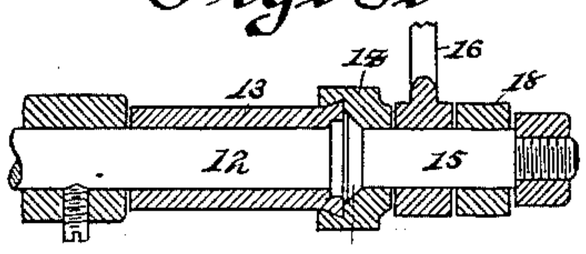

Witnesses

J. Watson Sims

Wm. F. Ross

Inventor

Simon Ross Jr.

By his Attorneys

Wood & Boyd.

THE NORRIS PETERS CO., PHOTO-LITHO., WASHINGTON, D. C.

UNITED STATES PATENT OFFICE.

SIMON ROSS, JR., OF CINCINNATI, OHIO, ASSIGNOR TO FRED. A. WATSON, OF CHICAGO, ILLINOIS.

SHOE-UPPER TURNING AND BEADING MACHINE.

SPECIFICATION forming part of Letters Patent No. 432,902, dated July 22, 1890.

Application filed May 17, 1889. Serial No. 311,155. (No model.)

To all whom it may concern:

Be it known that I, SIMON ROSS, Jr., a citizen of the United States, and a resident of Cincinnati, in the county of Hamilton and State of Ohio, have invented certain new and useful Improvements in Shoe-Upper Turning and Beading Machines, of which the following is a specification.

My invention relates to an improvement in shoe-upper-turning machines; and it consists in the novel construction and arrangements of devices for performing the different steps of the operation in a more satisfactory manner than has heretofore been accomplished.

One of the objects of my invention is to provide a housing within the base of the machine for the operative parts, and to catch and hold the oil and prevent it from being dropped on the work.

Another object of my invention is to provide means for operating the machine without any sensible jar and making a comparatively-noiseless machine, as well as to operate the parts positively and construct the same cheaply, all of which will be fully set forth in the description of the accompanying drawings, making a part of this specification, in which—

Figure 1 is a front elevation of my improvement with a part of the shell-base broken off to show the operative parts. Fig. 2 is a central vertical section on line *x x*, Fig. 1. Fig. 3 is a bottom plan view with the base of the machine removed. Fig. 4 is a diagram of the operative parts. Fig. 5 is a section of the rock-shaft shown in Fig. 3.

A represents a hollow standard, which springs from the top of the shell-base of the machine and contains an upright shaft B which is reciprocated by appropriate mechanism, and the end of which is flattened to serve as a turning-iron to open the scallop. This shaft is normally held within the casing A, as will be hereinafter explained.

C represents an upright standard provided with overhanging arm D, forming one of the jaws of the beading mechanism. The standard A is mounted upon the base E, which is made hollow to receive the working parts, and is hinged to the bed-plate F. This bed-plate is provided with an exterior ledge *a*, into which the rim *b* of the base E seats, making a firm support of the base on the bed-plate.

c represents the hinges; *d*, the hasp or hook for fastening the base E to the bed-plate F.

The working parts of the machine are inclosed in the housing of the base, which may be readily swung back on its hinges to allow the parts to be examined or oiled. The bed-plate is cup-shaped, and catches the oil and prevents it from coming in contact with the work.

In the operation of this machine it is sometimes desirable to oscillate the beading-jaw 1 in unison with the reciprocation of the turning-iron B. It is also desirable to regulate the stroke of the turning-iron as well as the tension to be applied upon the jaw 1. This I accomplish by the following instrumentalities: 2 represents a driving-shaft journaled in the sleeve 3 of the frame. 4 represents a pulley for conveying motion to the said shaft. 5 represents a crank-pin. 6 represents a wrist, which journals on said crank-pin. It is provided with a horizontal crank 7 and an upright pitman *e* to convey motion to jaw 1. Crank 7 conveys motion to link 8, which is journaled to the crank-pin 10, attached to arm 11, which is keyed to the rock-shaft 12. This oscillating arm 11 is preferably beveled off to form a way for the sliding block 14, which is reciprocated thereon. Said slide 14 carries stud 15, which is keyed thereto.

16 represents a connecting-rod journaled at one end to the stud 15, and the other end is hinged to and reciprocates shaft B.

19 represents a bell-crank lever, one end of which is hinged to the link 18, which link journals upon the stud 15.

20 represents a stud in the frame, on which the bell-crank lever journals.

21 represents a treadle-rod hinged to the upper end of the bell-crank lever 19.

22 represents a spring attached to the bell-crank lever 19. Its tension is adjusted so as to hold the slide 14 and its crank-pin 15 normally opposite the center 12 of the oscillating

arm 11. In this position the oscillation of arm 11 rotates stud 15, but imparts no motion to the connecting-rod 16 and shaft B. As this slide 14 is moved away from the center 12, the oscillation of the arm 11 will impart motion to the link 16 and reciprocate the shaft B. This movement of slide 14 is controlled by means of the treadle 21, bell-crank lever 19, connecting-rod 18, so that the slide 14 may be moved down upon the oscillating arm 11 and give the least or the extreme motion to the turning-iron. As soon as the strain upon the treadle device 21 is removed the slide 14 is drawn back by the spring 22 opposite the center 12, and no motion is imparted to the link 16. As motion is desired to be imparted to crank 15, the operator applies strain to the treadle 21 to draw the bell-crank lever 19 down, and hence remove the slide 14 down on the oscillating arm 11. The distance that the turning-iron B projects up from the pyramid of the casing A is thus controlled by the operation of the foot-lever. Said bar may be projected to the point *i*; but when the parts are in a normal position it occupies a position within the casing A, as shown in Fig. 1. Hence turning-iron may be controlled for any kind of work by the foot of the operator. In order to reciprocate the beading-jaw 1 and beat down or compress the work placed between the jaws 1 and D, it is essential that the motion be a cushioned or elastic one for two reasons—first, to prevent noise, and, second, to prevent cutting or abrasing the material. This is accomplished by means of the wrist 23, which is provided with plunger 24, that reciprocates against the spring 25, placed in a socket 27 in the heel of cross-arm 26, and is coiled around the rod 28. 29 represents a cushion, preferably made of rubber, between the nut 30 and the cross-head 26. Now as this spring interposed between the plunger 24 and the cross-arm 26 is the medium by which motion is conveyed to the jaw 1, the operation or the pinch of the jaws 1 and D is a soft or increasing one, the rigidity of the spring 25 being the controlling element. When the spring 25 is compressed by the forward motion of the plunger 24, the tendency is to lift the nut 30 off of its base by the pressing up of the plunger; but cushion 29 prevents a hammer or shock on the return or downward movement of the plunger 24, thus rendering the operation of the parts noiseless, as well as taking off the jar.

It will be observed in the operation of this machine that the motions are conveyed from the main driving-shaft to the compressing-jaw by means of cranks and links, and that these operate against springs, so that the motion of the operating parts is positive, noiseless, and jars are prevented; hence the machine can be speeded higher than would otherwise be the case, and the operation of the springs prevents jarring, the cushioning of the parts prevents the breaking or abrasion of the work, and accomplishing the object of a beader in a more satisfactory manner than the machines of this class heretofore employed.

Having described my invention, what I claim is—

1. A machine for turning and beading shoe-uppers, comprising a turning-iron *a*, a cup-shaped bed-plate, and a swinging shell-base hinged at one edge of the bed-plate and having a hollow standard provided with a movable and a stationary beading-jaw and containing a pitman, said hinged shell-base supporting, carrying, and housing the mechanism which operates the turning-iron and the jaw-actuating pitman, substantially as described.

2. In a machine for turning and beading shoe-uppers, the combination, with a jaw D and the oscillating jaw 1, having an arm 26, provided with a socket in its heel end, of a spring 25, inclosed in the socket, a wrist 23, having a plunger 24 bearing against the spring in the socket, a pitman *e*, connected to the wrist, and means for reciprocating the pitman, substantially as described.

3. In a machine for turning and beading shoe-uppers, the combination of a jaw D, an oscillating jaw 1, having an arm 26, provided with a socket 27, a spring 25, inclosed in the socket, a plunger 24, bearing against the spring and having a rod 28 extending through the latter and the jaw-arm, a nut 30 on the rod, a cushion 29 between the nut and jaw-arm, a pitman *e*, connected with the plunger, and means for reciprocating the pitman, substantially as described.

4. In a machine for turning and beading shoe-uppers, the combination, with a jaw D, an oscillating jaw 1, and a pitman *e*, of a drive-shaft 2, a crank-pin 5, the crank-arm 7, the link 8, the oscillating arm 11, having a slide-block 14, provided with a stud 15, a turning-iron shaft B, and a rod 16, connecting the turning-iron shaft with the stud on the slide-block, substantially as described.

5. In a machine for turning and beading shoe-uppers, the combination, with the turning-iron shaft B, of an oscillating arm 11, having a slide-block 14, provided with a stud 15, means for oscillating the block-carrying arm, and a rod 16, connecting the turning-iron shaft with the stud on the slide-block, substantially as described.

6. In a machine for turning and beading shoe-uppers, the combination, with the turning-iron shaft B, of an oscillating arm 11, having a slide-block 14, provided with a stud 15, a rod 16, connecting the turning-iron shaft with the stud, and means for moving the slide-block along the length of the oscillating arm to control the stroke of the turning-iron shaft, substantially as described.

7. In a machine for turning and beading shoe-uppers, the combination, with the turning-iron shaft B, of an oscillating arm 11, having a slide-block 14, provided with a stud 15, a rod 16, connecting the turning-iron shaft with the stud, a bell-crank lever 19, connected

at one end with the slide-block, and a rod 21 for operating the bell-crank lever to move the slide-block, substantially as described.

8. In a machine for turning and beading shoe-uppers, the combination, with a turning-iron shaft B, of an oscillating arm 11, having a slide-block 14 provided with a stud 15, a rod 16, connecting the turning-iron shaft with the stud, a bell-crank lever 19, connected with the slide-block, a spring 22, attached to the bell-crank lever, and a rod 21 for moving the lever, substantially as described.

In testimony whereof I have hereunto set my hand.

SIMON ROSS, JR.

Witnesses:
T. SIMMONS,
F. P. HORTON.