(No Model.)

F. S. MADISON.

WOOD WORKING MACHINE.

No. 428,051. Patented May 13, 1890.

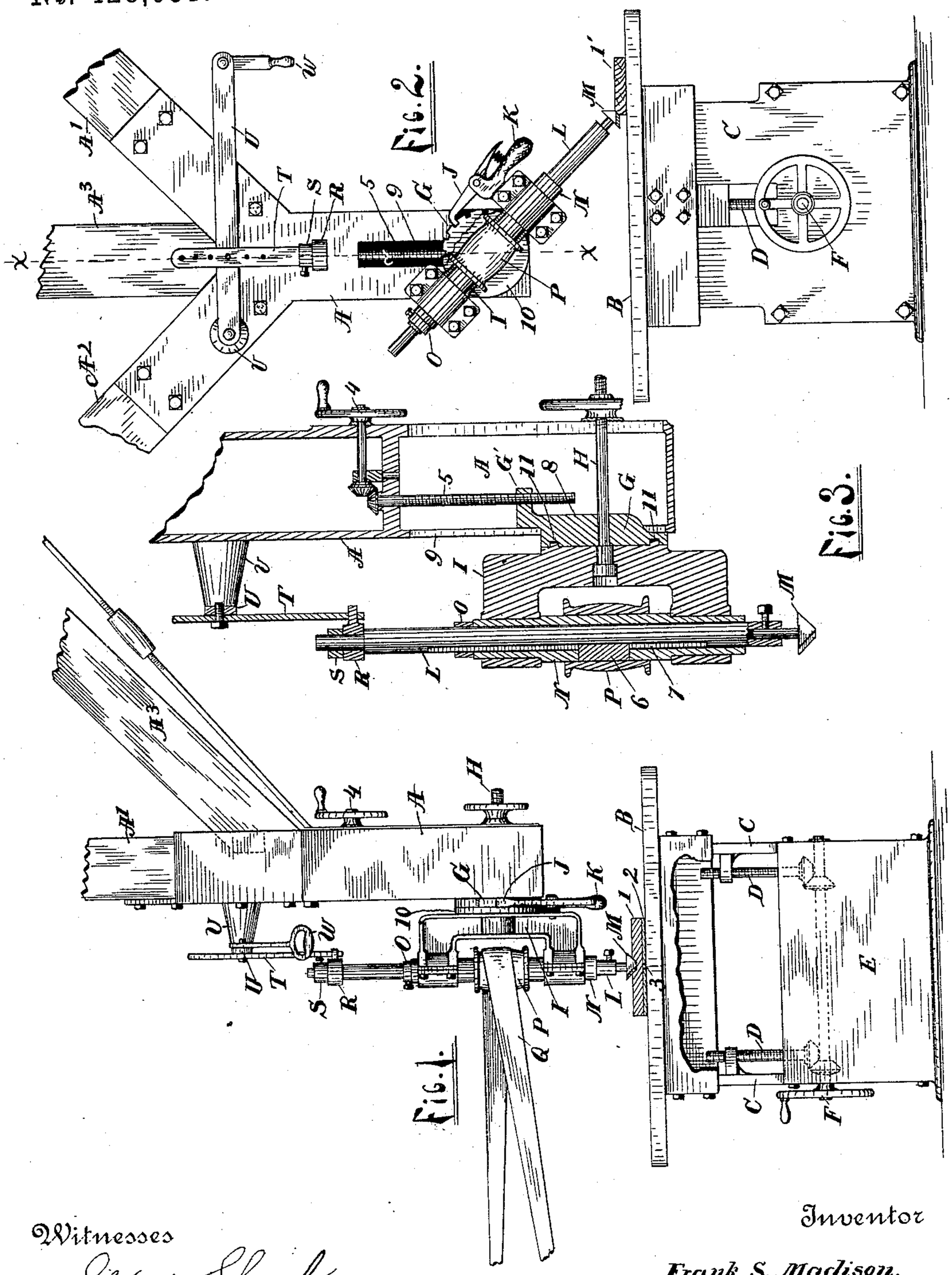

Witnesses

G. W. Shook

C. R. Buchanan

Inventor

Frank S. Madison.

By his Attorneys

Moulton & Rogers.

THE NORRIS PETERS CO., PHOTO-LITHO., WASHINGTON, D. C.

UNITED STATES PATENT OFFICE.

FRANK S. MADISON, OF GRAND RAPIDS, ASSIGNOR OF ONE-HALF TO WILLIAM E. HOYT, OF GREENVILLE, MICHIGAN.

WOOD-WORKING MACHINE.

SPECIFICATION forming part of Letters Patent No. 428,051, dated May 13, 1890.

Application filed July 16, 1889. Serial No. 317,687. (No model.)

To all whom it may concern:

Be it known that I, FRANK S. MADISON, a citizen of the United States, residing at Grand Rapids, in the county of Kent and State of Michigan, have invented certain new and useful Improvements in Wood-Working Machines; and I do hereby declare the following to be a full, clear, and exact description of the invention, such as will enable others skilled in the art to which it appertains to make and use the same.

My invention relates to a machine for wood-working, particularly carving, panel-cutting, and chamfering—viz., beveling or sloping an edge which was originally rectangular—and stop-chamfering—viz., arresting the process at intervals or near the margin of the stock to form shoulders at various points on said edge; and it consists in the construction, combination, and arrangement of the various parts hereinafter described, and particularly pointed out in the claims, reference being had to the accompanying drawings, in which—

Figure 1 is a front elevation. Fig. 2 is a side elevation; Fig. 3, an enlarged vertical section on the line *x x* of Fig. 2, with the spindle placed as in Fig. 1.

A represents a cast hollow pendent head provided with a vertical opening 9 and supported from the ceiling by arms A' A^2 A^3 and suitable stay-rods to make it secure only one. (Not lettered, being shown in the drawings.)

B is a table for holding the work, which is vertically adjustable by means of the hand-wheel F, journaled in the base E, and operating-screws D, adapted to inwardly-projecting brackets (not lettered) upon the slides C.

G is a face-plate, with notched edges arranged near the end of the pendent head, and is provided with rib 8 and a stud G, which is adapted to move vertically in said opening 9 and engages with the screw 5, provided with a bevel-gear and counter-shaft provided with a hand-wheel 4 for vertically adjusting the same. H is a bolt passing through the plate G and upon which the plate G turns.

I is a spindle-supporting yoke supported upon the end of the bolt H and upon which it is adapted to turn, and is provided with a flanged seat 10, which engages with the face of the face-plate G, and is provided with a circular tongue 11, engaging with corresponding groove in the face of the plate G.

J is a latch engaging the notches in the edge of the plate G, and is provided with the handle K, secured to the yoke I, for adjusting the vertical inclination of said yoke.

L is a spindle carrying the cutter M.

N is a sleeve journaled in the yoke I in suitable bearings and through which the spindle passes.

O is a set-collar on the spindle to limit its downward movement.

P is the driving-pulley secured to the sleeve by key 6, and Q driving-belt from any suitable power.

A lever U, carrying a connecting-rod T, to which it is attached by a pin or bolt inserted in one of the holes provided in the rod T for vertical adjustment, is pivoted to a stud V and provided with a handle W. At the end of the rod T is secured the loose collar R, in which the end of the spindle is placed when in its permanent perpendicular position, (shown in Fig. 1,) and when in this position the spindle has its downward movement limited to accommodate the various thicknesses of the stock operated upon by the set-collar S, secured to the end of the spindle above and in contact with the collar R. A spline 7 secures the spindle to the sleeve, so that when the latter is rotated the spindle partakes of its movement and rotates the cutter M. The table is provided with a guide-pin 3, and blocks of wood 1 1′ are shown upon the table, and underneath is a pattern 2, grooved to engage the pin. When adapted for use as a routing or panel-cutting machine, the spindle is placed vertically, as in Fig. 1. For chamfering and carving it is placed at an angle, as shown in Fig. 2. For stop-chamfering the movement of the cutter is arrested by proper manipulation of the stock at a suitable distance from the margin thereof in the usual manner of operating such machinery. Any suitable cutter may be used. To change the angle of inclination of the spindle, it is only necessary to seize the handle K, lift the latch J, and the yoke I, rotating freely upon the bolt H, enables the inclination of the spindle to be readily adjusted,

and it may be fixed wherever desired by engaging one of the notches upon the edge of the plate G.

Having thus described my invention, what I claim, and desire to secure by Letters Patent, is—

1. In a wood-working machine, the combination of a vertical pendent head, a face-plate attached to said head, a yoke pivoted to said face-plate, an adjusting-screw attached to said face-plate and head for vertically adjusting said yoke, a sleeve journaled to said yoke, and a cutter-spindle secured in said sleeve adapted to rotate therewith.

2. In a wood-working machine, the combination of a vertical pendent hollow head provided with a vertical opening, as 9, a face-plate provided with a stud, as G′, adapted to move vertically in said opening, a yoke pivoted to said face-plate, a screw attached to said head and yoke for vertically adjusting said yoke, a sleeve journaled to said yoke, a cutting-spindle arranged within said sleeve and adapted to rotate therewith, and a latch for adjusting the vertical inclination of said yoke.

3. In a wood-working machine, the combination of a vertical pendent hollow head provided with a vertical opening, as 9, a face-plate, as G, having a periphery provided with notches, and a stud, as G′, adapted to said vertical opening, a yoke having a seat engaging with said face-plate, a bolt for securing said face-plate and yoke together and on which the yoke is adapted to turn, a vertical adjusting-screw arranged within said hollow head, provided with a wheel for operating the same, attached to said head and face-plate for vertically adjusting said yoke, a sleeve journaled to said yoke, a cutting-spindle arranged within said sleeve and adapted to rotate therewith, a latch secured to said yoke engaging with said notches on the face-plate, a collar, as R, provided with a rod, as T, and a lever, as U, and a set-collar, as S, arranged substantially as described, and for the purposes set forth.

4. In a universal wood-working machine, the combination of a vertical pendent hollow head, a face-plate secured to said head, a screw for vertically adjusting said face-plate, arranged within said head, a yoke having a seat provided with a curved tongue adapted to a corresponding groove in said face-plate, a bolt passing through said yoke and face-plate and head, whereby said face-plate and yoke are secured together and to said head, a sleeve journaled to said yoke, and a cutter-spindle secured in said sleeve and adapted to rotate therewith, substantially as described.

In testimony whereof I affix my signature in presence of two witnesses.

FRANK S. MADISON.

Witnesses:

DENNIS L. ROGERS,

L. V. MOULTON.