(No Model.) 2 Sheets—Sheet 1.

J. J. CHAPMAN.

MILLSTONE DRESSING MACHINE.

No. 420,185. Patented Jan. 28, 1890.

Fig. 2.

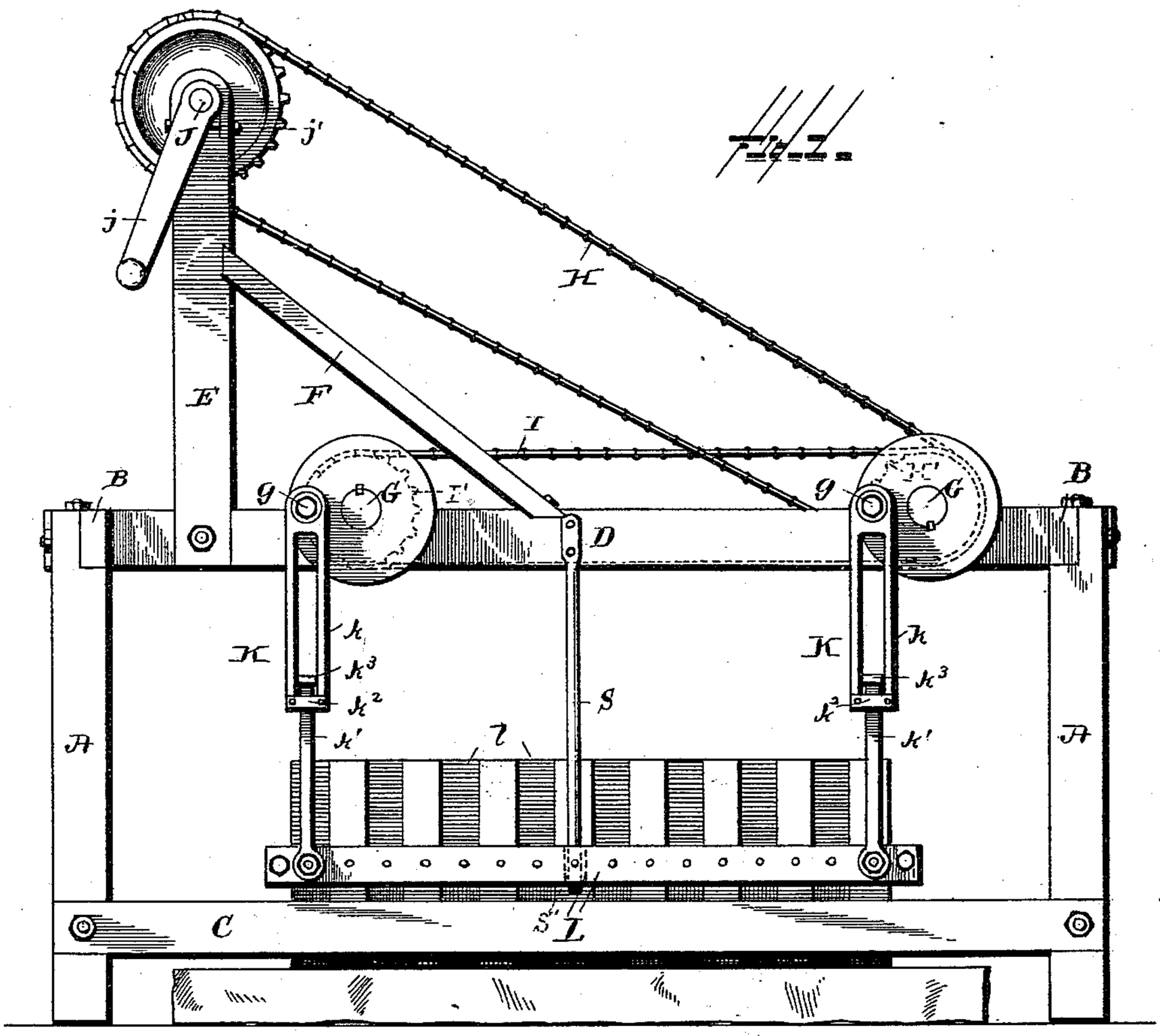

Fig. 3.

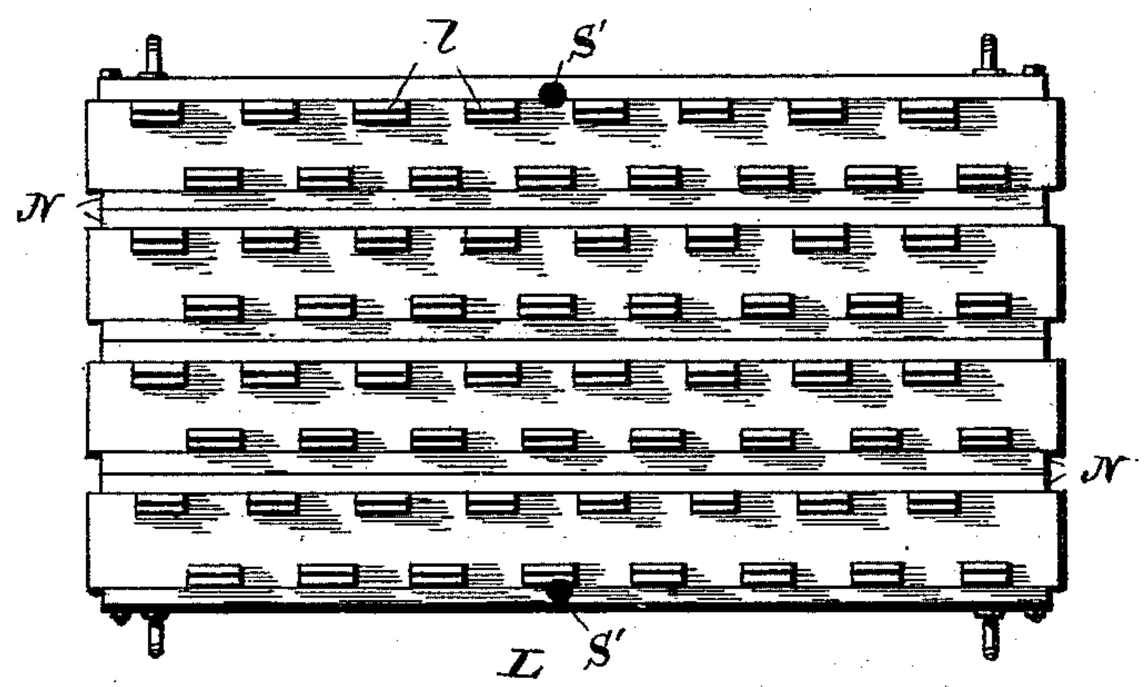

Witnesses

Albert L. Speiden

O. H. Loveck,

Inventor

John J. Chapman

By his Attorney

Franklin H. Hough

N. PETERS, Photo-Lithographer, Washington, D. C.

(No Model.) 2 Sheets—Sheet 2.

J. J. CHAPMAN.

MILLSTONE DRESSING MACHINE.

No. 420,185. Patented Jan. 28, 1890.

Fig. 2.

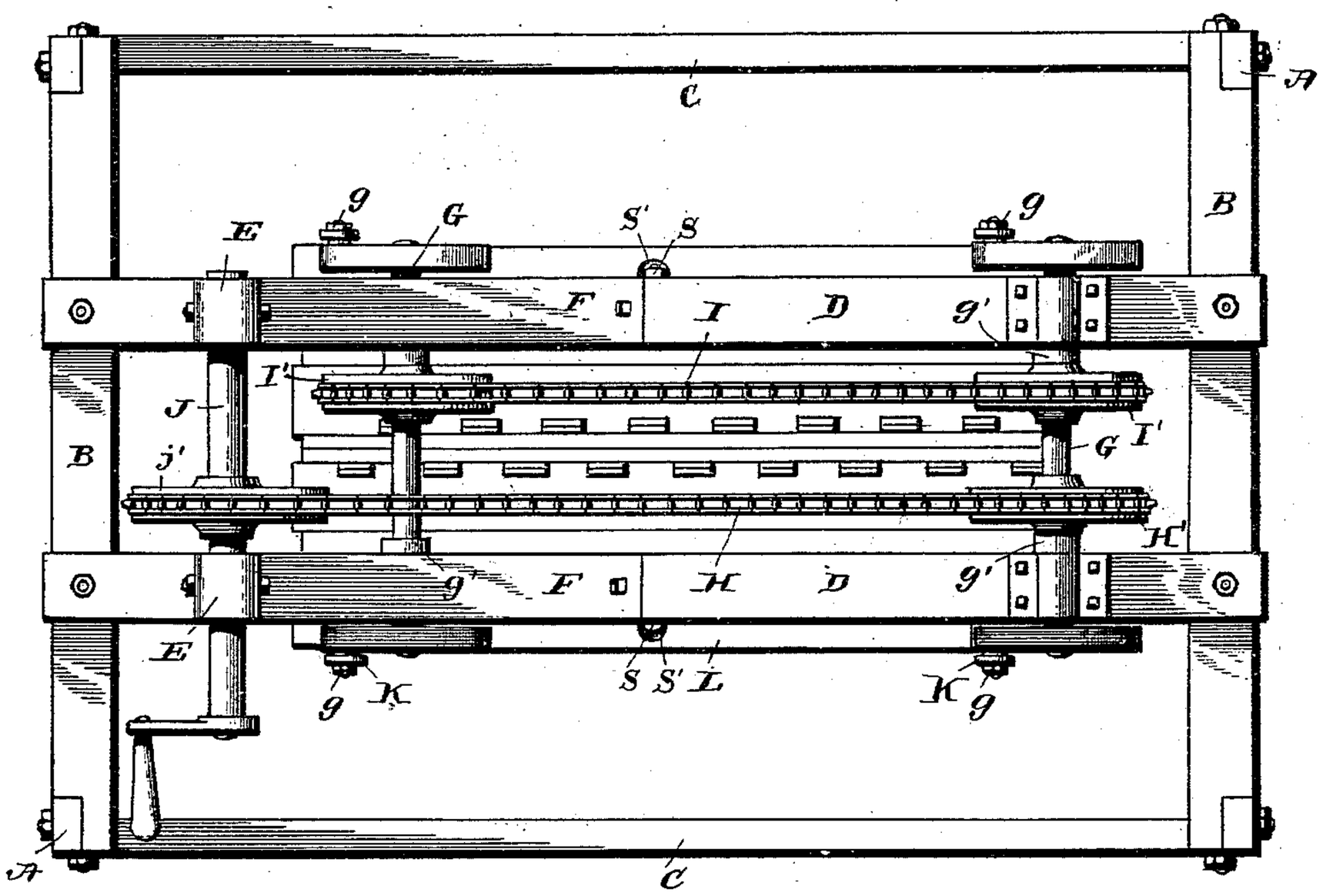

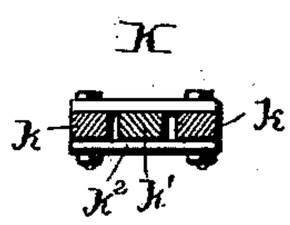

Fig. 4.

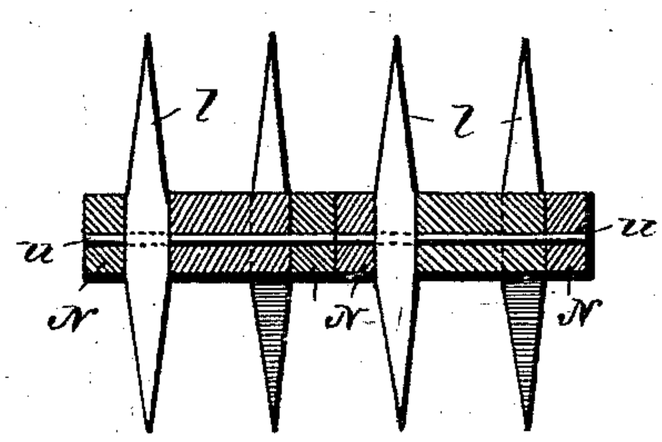

Fig. 5.

Witnesses

Albert Spieden.

R. H. Laucks.

Inventor

John J. Chapman

By his Attorney

Franklin H. Hough

N. PETERS, Photo-Lithographer, Washington, D. C.

UNITED STATES PATENT OFFICE.

JOHN JAMES CHAPMAN, OF NEBLETTS, VIRGINIA.

MILLSTONE-DRESSING MACHINE.

SPECIFICATION forming part of Letters Patent No. 420,185, dated January 28, 1890.

Application filed November 12, 1889. Serial No. 330,007. (No model.)

To all whom it may concern:

Be it known that I, JOHN JAMES CHAPMAN, a citizen of the United States, residing at Nebletts, in the county of Lunenburg and State of Virginia, have invented certain new and useful Improvements in Millstone-Dressing Machines; and I do declare the following to be a full, clear, and exact description of the invention, such as will enable others skilled in the art to which it appertains to make and use the same, reference being had to the accompanying drawings, and to the letters of reference marked thereon, which form a part of this specification.

This invention relates to stone-dressing machines which have a frame provided with a gang of picks or dressing-tools, said frame being reciprocated vertically by suitable operating devices mounted on the frame of the machine.

The object of the invention is to prevent any lateral or swaying motion of the frame carrying the dressing-tools, which is effected in a simple and economical way by connecting the said frame with the cranks of the operating-shafts by telescopic hangers.

A further object of the invention is to have the frame carrying the dressing-tools made reversible, whereby when the tools on one side are dull the frame can be reversed to bring the sharp set of tools in position to operate upon the stone.

A still further object of the invention consists in having the frame carrying the tools made in sections, each section or bar having a gang of tools secured thereto in a novel manner.

The improvement consists in the peculiarities of construction and in the novel combination of parts which will be more fully described and claimed, and shown in the accompanying drawings, in which—

Figure 1 is a side view of a stone-dressing machine embodying my invention. Fig. 2 is a top plan view of the machine. Fig. 3 is a top plan view of the frame provided with the dressing-tools. Fig. 4 is a cross-section of the hangers, and Fig. 5 is a detail section showing the manner of securing the tools to the frame.

The frame is composed of the corner-posts A, the cross-bars B, the lower side bars C, the upper beams D, the standards E, and the braces F, interposed between the standards E and the beams D. The shafts G, near each end of the frame, are journaled in the beams D, and have their ends projected beyond the beams D and provided with the cranks *g*. The middle portion of the shafts is provided with the stops or collars *g'*, which bear against the inner sides of the beams D and prevent any longitudinal movement of the said shafts. The sprocket-chains H and I pass over the pulleys H' and I' upon the shaft G. The shaft J, journaled in the standards E, has one end extended and provided with the crank *j*, and has the pulley *j'* keyed thereon and located between the said standards E. The endless band or belt H passes around the pulley *j'* and around one of the shafts G, and the endless belt I passes around the two shafts G, substantially as shown, to transmit motion from one to the other. The frame L, carrying the dressing-tools, is suspended from the cranks *g* by the hangers K, which are composed of the telescopic sections *k* and *k'*. The sections *k* are pivoted at their upper ends to the cranks *g* and have their lower ends slotted and provided with the yoke k^2. The sections *k'* are pivotally connected with the frame L at their lower ends and have their upper ends passing through the yokes k^2 and provided with the heads k^3, which work in the slots of the sections *k*. This frame L is reversible, and the dressing-tools *l* project above and below it to bring the one or the other end of the tools into an operative or active position, whereby a sharp or a different kind of a cutting-edge may be obtained, as required.

The frame L is composed of a series of bars placed side by side and secured together in any desired manner. The bars have vertical notches in their sides, in which the dressing-tools *l* are fitted and secured by the strips N, which are fastened to the sides of the bars by the bolts or pins *u*, which pins pass through the said tools to hold them against vertical displacement.

In the present instance I have shown guides consisting of vertical rods S, which rods are secured at their upper ends to the upper side

timbers of the frame of the machine, said rods being extended through openings S′, formed for their reception in the outer edges of the movable frame.

In practice the machine is adjusted over the stone, or, what is the equivalent, the stone to be dressed is placed beneath the machine in such a position that the dressing-tools will operate on the desired face thereof. The shaft J being set in motion will transmit its movement to the shafts G through the devices hereinbefore described, and the frame L will receive a vertical reciprocating movement by reason of its connection with the cranks *g* at the ends of the shafts G. The telescoping hangers permit the frame L to adapt itself to the varying thickness of the stone operated upon. The telescoping sections can have no possible sag and prevent any lateral motion of the frame L.

Having thus described my invention, what I claim to be new is—

1. The combination, with the bars of the frame L, having notches in their sides, and the tools fitted in said notches, of the strips placed against the sides of the bars, and the pins passing through the strips, the tools, and the bars, as and for the purpose described.

2. The combination, with the main frame, the shafts journaled therein and provided with sprocket-wheels and cranks, as described, and the frame L, provided with the dressing-tools, of the telescoping hangers connecting the frame L with the said cranks, and mechanism, substantially as described, for rotating the shafts, substantially as described, and for the purpose specified.

3. The combination, with the main frame, the shafts journaled therein and provided with sprocket-wheels and cranks, and the frame L, carrying the dressing-tools, of the telescoping hangers composed of two sections, which have their outer ends pivotally connected with the cranks and the said frame L, substantially as described, and which have the inner end of one section slotted and united by a yoke, and the inner end of the other section passing through the said yoke and provided with a head, and mechanism, substantially as described, for rotating the shafts upon the main frame, substantially as described.

4. The combination, with the frame, of the shafts G, having cranks *g*, and having the stops *g′*, the shaft J, having a pulley *j′*, on one of the shafts G, the belt I, connecting the two shafts G, the frame L, provided with the dressing-tools, and the telescoping hangers connecting the frame L with the said cranks *g*, substantially as described.

In testimony whereof I affix my signature in presence of two witnesses.

JOHN JAMES CHAPMAN.

Witnesses:

GEORGE W. ROTH,
JOHN W. TURNER.