(No Model.) 2 Sheets—Sheet 1.

I. C. GORDON.

APPARATUS FOR ROASTING COFFEE.

No. 379,891. Patented Mar. 20, 1888.

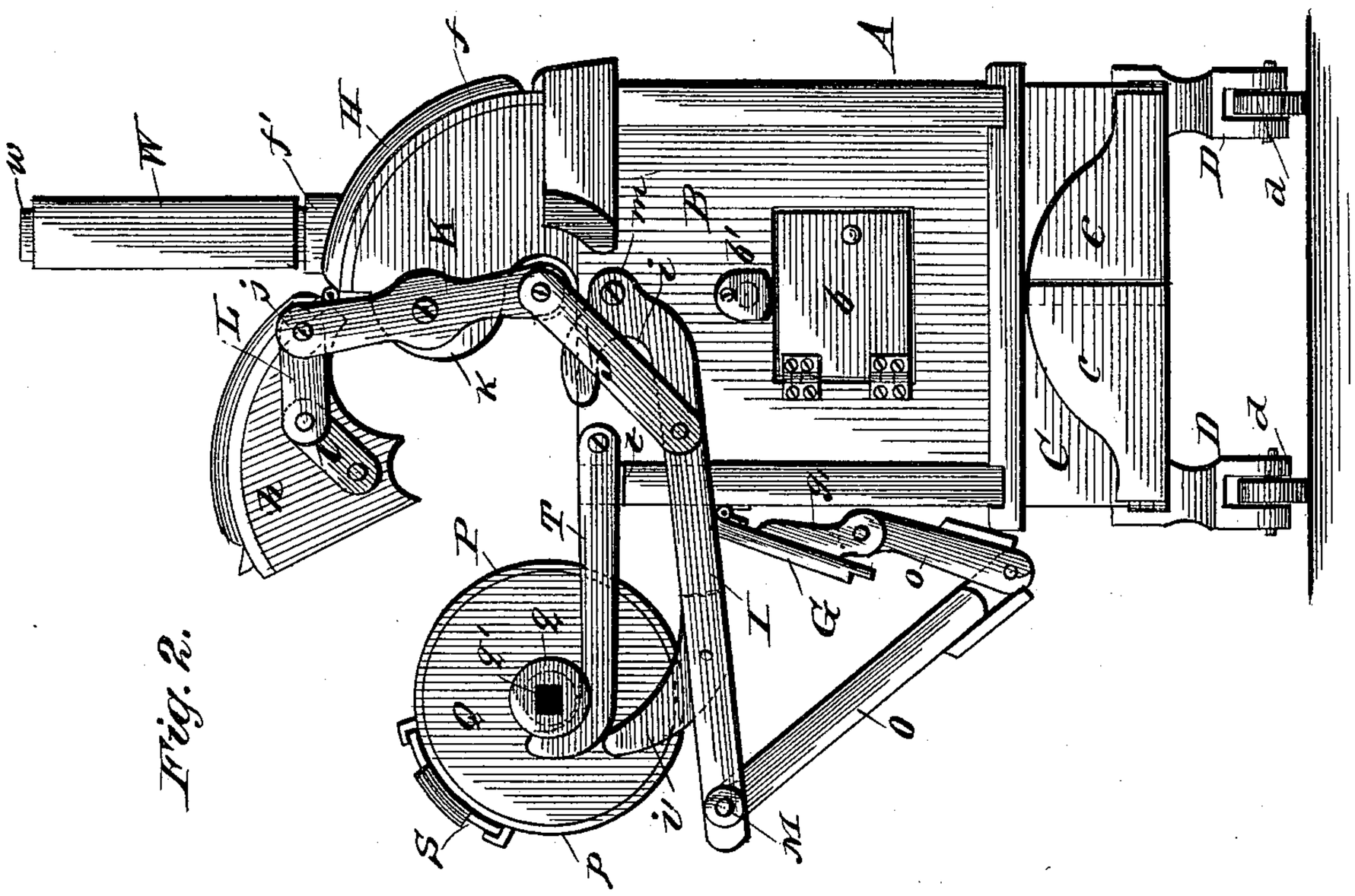

Fig. 2.

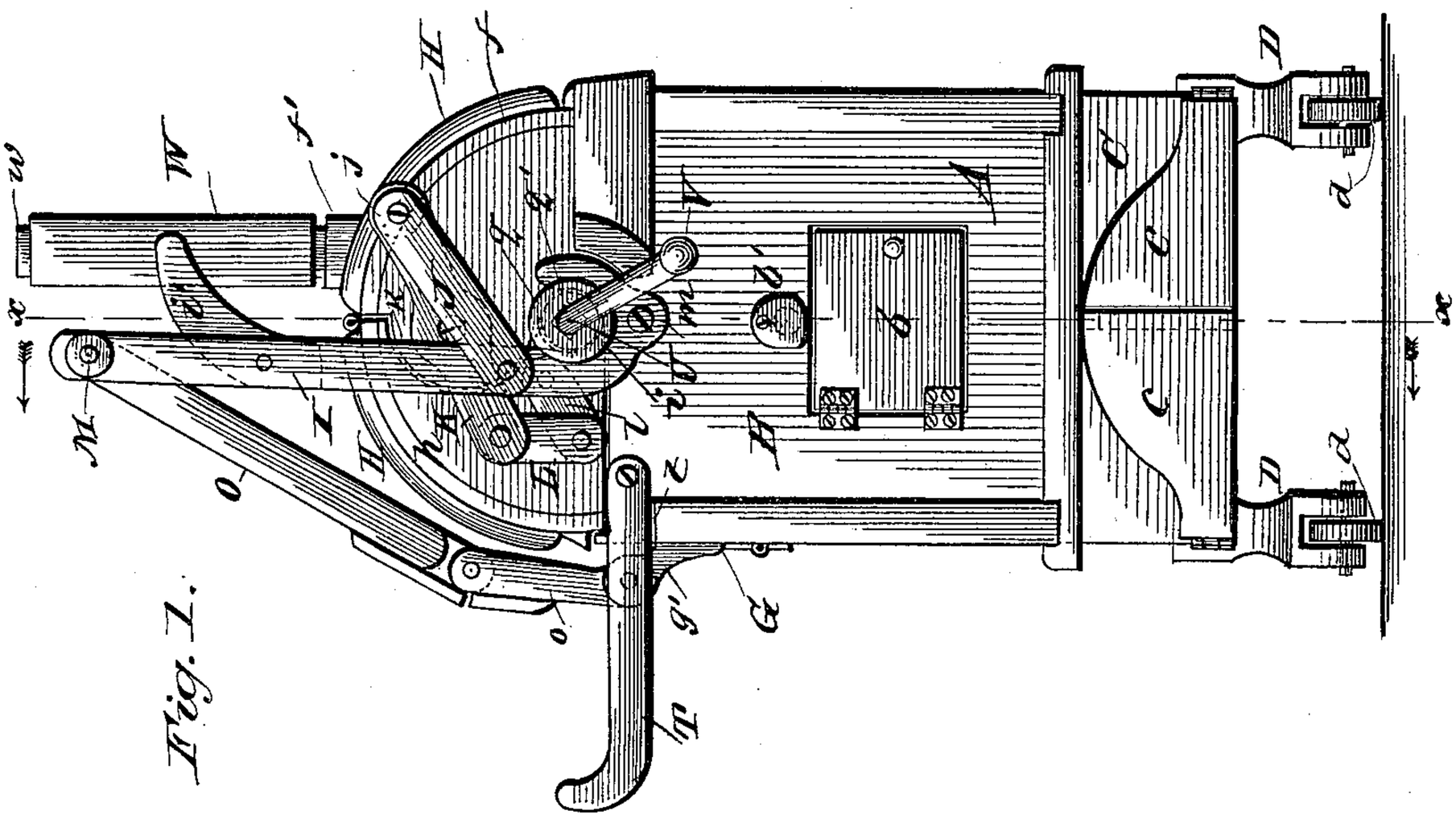

Fig. 1.

WITNESSES

Phil C. Dirtrich.

A. E. Dowell.

INVENTOR.

Isaac Corry Gordon.

by:

T. H. Alexander.

Attorney.

N. PETERS, Photo-Lithographer, Washington, D. C.

(No Model.)

2 Sheets—Sheet 2.

I. C. GORDON.

APPARATUS FOR ROASTING COFFEE.

No. 379,891. Patented Mar. 20, 1888.

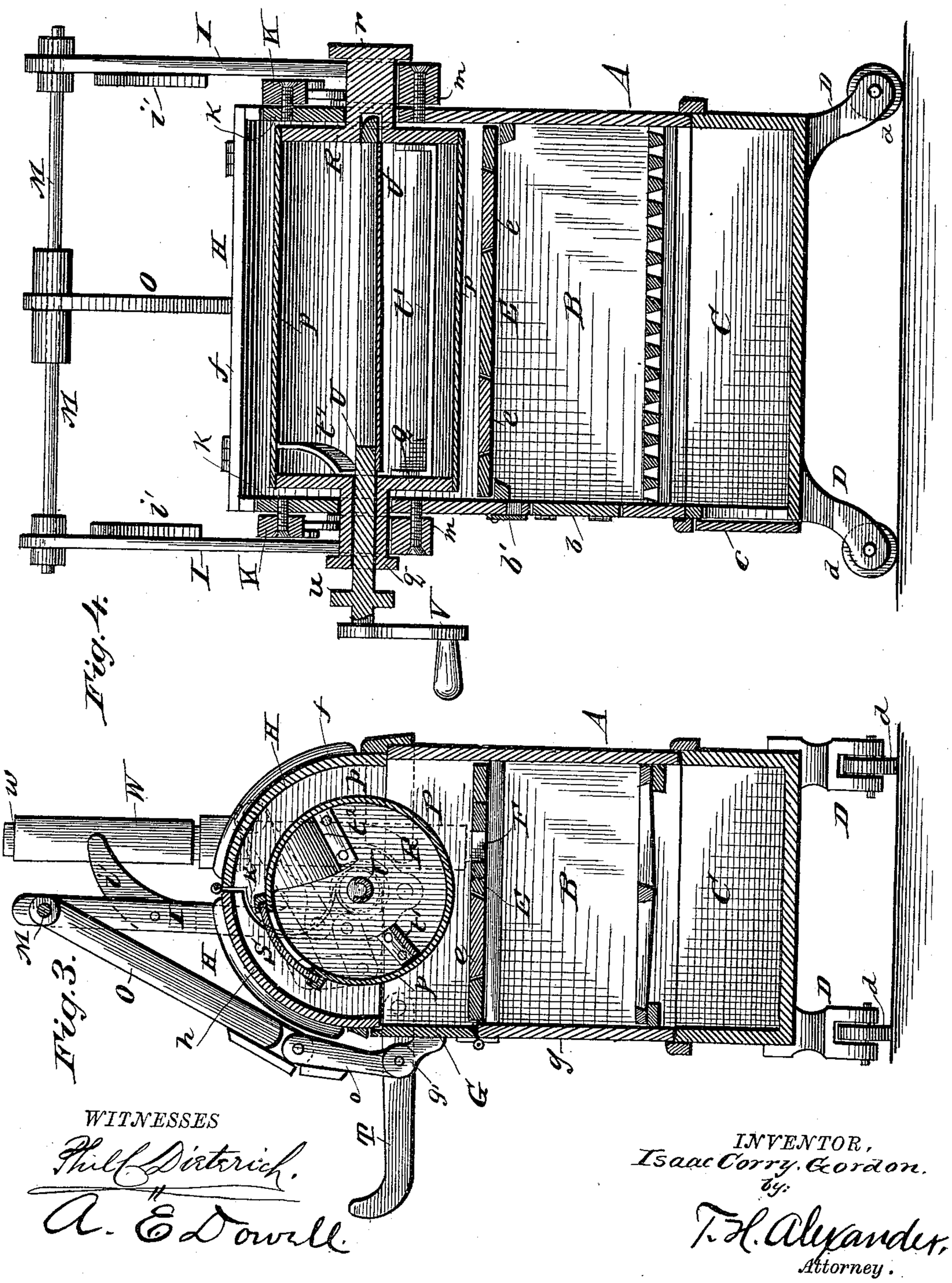

WITNESSES

Phil. Dirterich.

A. E. Dowell.

INVENTOR,

Isaac Corry Gordon.

by

T. H. Alexander,

Attorney.

N. PETERS, Photo-Lithographer, Washington, D. C.

UNITED STATES PATENT OFFICE.

ISAAC CORRY GORDON, OF CHARLESTON, SOUTH CAROLINA, ASSIGNOR OF ONE-HALF TO LOUIS SEEL, OF SAME PLACE.

APPARATUS FOR ROASTING COFFEE.

SPECIFICATION forming part of Letters Patent No. 379,891, dated March 20, 1888.

Application filed June 25, 1887. Serial No. 242,503. (No model.)

To all whom it may concern:

Be it known that I, ISAAC CORRY GORDON, of Charleston, in the county of Charleston and State of South Carolina, have invented certain new and useful Improvements in Apparatus for Roasting Coffee, &c.; and I do hereby declare that the following is a full, clear, and exact description thereof, reference being had to the accompanying drawings, and to the letters of reference marked thereon, which form part of this specification, in which—

Figure 1 is a front end view of my improved coffee-roasting apparatus closed and ready for use. Fig. 2 is a similar view showing the same open and the cylinder rolled out in position for filling or emptying. Fig. 3 is a central vertical cross-section of the apparatus. Fig. 4 is a central vertical longitudinal section of the same.

This invention relates to improvements in apparatus for roasting or drying coffee, peanuts, and other similar berries or grains; and it has for its objects to provide a portable furnace or heating-stove, with an opening and closing oven located above the fire-chamber, and also to provide a rotary roasting-cylinder for containing the coffee, berries, or other articles to be treated, and which can be mounted in such manner as to be thrown inward and held within the oven when the latter is closed, and which will be automatically thrown outward or expelled from the oven when the latter is opened, so that it can be readily opened for emptying or filling and the operators not be subjected to great heat.

To these ends the invention consists in the novel construction and arrangement of parts, hereinafter described, illustrated in the drawings, and particularly pointed out in the claims hereto appended.

Referring to the drawings by letter, A designates the furnace of the apparatus, which consists of a main or upper portion, B, containing the fire-chamber and its grate, and having the fuel-feeding door *b* and sight *b'*, as shown. The part B is mounted on a base portion, C, which forms the ash-chamber, and which is provided at its front end with suitable doors, *c c*, for permitting access thereto and for regulating the draft of the furnace. This part C is mounted on legs D, provided with rollers *d*, so that the furnace can be easily moved to desired points for use.

Above the fire-chamber in part A, but below the upper edges of the walls of the same, is the horizontal transverse plate or partition E, which is preferably provided with plate-holes and covers *e e*, as shown, so that the furnace can be adapted for ordinary cooking purposes. Near one corner of plate E is the draft or flue opening F, through which the heated products of combustion pass from the fire-chamber into the oven. One side of portion A above plate E is formed into a door, G, which is hinged to the lower fixed portion, *g*, of the part A on that side.

Above plate E and mounted on portion A is the semi-cylindrical covering or arch H, which fits closely upon part A and forms the top of the oven above plate E. This part H is made in two equal portions, *f* and *h*, the part *f* being above flue F of plate E and on the side of part A opposite door G. This part *f* is fixed and the part *h* is hinged thereto at their upper adjoining portions, and is adapted to be swung upward thereon, and when closed makes a tight joint with said part *f* and with the remaining portions of part A and door G thereof.

I I designate levers pivoted to the opposite ends of portion A, about centrally below part H. The ends of levers I I just above their pivots are provided with short rearwardly and upwardly curved arms, which at their junction with levers I form journal-bearings *i*, as shown, for a purpose hereinafter explained, the pivots of the levers being below journals *i*. The levers I I are connected by means of link-bars J J with the ends of oscillating levers K, and each of the levers K is pivoted centrally on a projection, *k*, formed on the end portions of part *f* of top H, the opposite end pieces of part *h* being correspondingly recessed to accommodate said projections, as shown. The opposite ends of levers K are connected by means of the toggle-joint bars L *l* with the lower inner corners of the end pieces of part *h*, as shown. The pivots of I I are formed on projections or lugs *m m*, which project from part A, so that these levers stand sufficiently outside of part H to permit free play of the levers K and L *l* between said levers I I and the ends of part H, and the levers J J are bent

or provided with lugs *j* at their connections with levers K and connected to the outer faces of levers I, so that they will not obstruct the movement of said levers. These levers stand normally, when the oven is closed, in the positions shown in Figs. 1 and 3, in which case the levers I I are vertical. These levers are connected at top by a cross rod or bar, M, as shown, so that the movement of one lever will similarly affect its opposite. To the center of bar M is connected the upper end of a bar, O, which extends down to and connects with or is hinged to the upper end of a short bar, *o*, the bars O *o* being shouldered on their outer edges near their hinges, so that while they can turn outward at their hinges they cannot turn inward. The lower end of bar *o* is pivoted to a lug, *g'*, centrally of and on the upper end of door G, as shown. This system of levers is the means for opening the oven, and their operation is as follows: By grasping the lug *g'* of door G and pulling the same outward, so as to unclose the door, or by catching hold of bar *o* and similarly pulling it outward, the rod M is swung downward and outward through its connections with door G and similarly affects the rods I I. These rods I I, acting through their connections, oscillate levers K and cause them to lift the part *h* of cover H, the parts assuming the position shown in Fig. 2, wherein the oven is shown fully open, the door G being down and the part *h* of the cover being raised. Upon the lifting of door G and bar *o* to their first positions the other levers will, through their connections with said bar *o*, close the part *h*.

P designates the roasting-cylinder, which is of proper length to enter freely between the end walls of part A and rotate freely in the oven when the latter is closed. This cylinder P is composed of the end plates, Q R, which are provided centrally with outstanding journals *q* and *r*, respectively. These pieces Q and R are united by a tight metallic casing, *p*, as shown, and the cylinder is provided with a tightly-closing door, S, which extends the whole length thereof, so that the cylinder can be quickly filled or emptied. The journals *q r* are of sufficient length to pass through suitable openings formed partly in the top H and part A, as shown, and be supported in the bearings *i*, formed in levers I I, as described, when the oven is closed.

T T designate arms pivoted to the ends of part A, near the door G, and adapted to engage with shoulders *t*, formed on part A, as shown, so that when the arms are lowered they will be supported horizontally. The outer ends of these arms T are curved upward, as shown, for a purpose hereinafter explained.

The levers I I are provided with curved fingers or arms *i' i'* near their ends, as shown, which, when the parts are in the position shown in Fig. 2, lie just beneath the curved ends of arms T T. The cylinder P is placed on the arms T T, as shown, and after it is filled with the coffee desired to be roasted the levers I I are raised, as described, and the curved fingers *i'* catch the journals *q r* of the cylinder and run the same inward into the oven, where it is supported by the journal-bearings *i i* of the levers, as described, and when in this position the oven is closed. When the oven is opened, as described, by the depression of the levers I I, the cylinder is thrown forward by the short upwardly-curved arms of the levers engaging with the journals of the cylinder and rolling the same forward and out of the oven onto arms T T, as will be readily understood from the drawings.

The cylinder P is provided internally with longitudinal ribs or agitator-blades *t' t'* and with the curved plate or plates t^2, which are secured to the interior faces of one or both end plates, Q and R, and are adapted to throw the coffee-grains toward the center of the cylinder. The journal *q* has a central longitudinal opening or passage, *q'*, through it, angular in cross-section, and which communicates with the interior of the cylinder through a corresponding opening in the plate Q.

U designates a shaft passed through the opening *q'* and having its inner end supported in a proper recess in the plate R, as shown. This shaft is made angular at its end, corresponding to opening *q'*, so as to engage therewith and cause the rotation of the cylinder when the shaft U is rotated, which may be done by means of the pulley *u*, secured on the shaft outside journal *q*, which is driven by proper belting from any convenient source of power; or the shaft and cylinder may be operated by means of the crank V, formed on the end of the shaft, as shown. The inner portion of shaft U is made hollow, as shown, so that it will collect grains of coffee, and by which the degree of roasting can be ascertained by withdrawing the shaft at intervals, as is obvious.

The cylinder P being made smoke-tight, as described, will prevent the injury of the coffee by contact with the products of combustion entering the oven, and will prevent the escape of the aroma of the coffee from the cylinder. Consequently the full flavor of the coffee will be retained.

The smoke and products of combustion are conducted from the oven through a flue, *f'*, made on part *f* of the top H, as shown, and with which is connected a section of pipe, W. This pipe W is provided at its upper end with a reduced portion, *w*, which corresponds in size to the opening F in plate E, and when it is desired to use the furnace for ordinary cooking purposes, as described, the pipe W is removed from flue *f'*, inverted, and set in the position shown in dotted lines, Fig. 3, where it connects opening F with flue *f'* and conducts the products of combustion direct from the fire-chamber to flue *f'*.

It is obvious that any kind of fuel can be employed to heat the oven, and that, if desired, gas or oil may be used, as the flame or pro-

ducts of combustion do not reach the coffee, and consequently can not taint the same.

The oven and its cylinder would be equally as effective if built upon a stationary furnace; but by having it portable, as described, it can be moved to convenient positions when in use, and when not employed can be put aside.

Having described my invention, what I claim as new is—

1. The combination, with a furnace, and oven situated above the same, having a sectional hinged top and door, of a roasting-cylinder provided with journals at its ends, the pivoted levers I I, provided with bearings *i* for the journals of the cylinder when the oven is closed, and the levers and links J, K, and L, connecting levers I with the hinged top of the oven, whereby the same is opened upon the depression of said levers, all substantially as specified.

2. The combination, with the furnace A, constructed substantially as described, of the cover H, composed of the fixed portion *f* and hinged portion *h*, the levers I I, pivoted to the ends of furnace A below top H, the pivoted levers K on the ends of part *f*, and the links J and L *l*, connecting levers K with the part *h* and levers I I, respectively, whereby the depression of the said levers raises the part *h*, all constructed and arranged substantially as set forth.

3. The combination of the furnace A, having plate E, and hinged side or door G above said plate, and the top H, composed of the fixed portion *f* and hinged portion *h*, substantially as described, with the levers I I, pivoted on furnace A, the rod M, connecting the upper ends of said levers, the series of links and levers J, K, and L, connecting each lever I with the corresponding end of part *h*, and the bars O *o*, connecting the rod M with the door G, all substantially as and for the purpose described.

4. The combination, with the furnace A, having door G and hinged top portion, *h*, substantially as described, of the levers I I, pivoted to the furnace and connected at top by a rod, M, the levers and links J, K, and L, connecting rods I with the part *h*, and the bars O *o*, connecting rod M with door G, with the cylinder P, mounted by its journals on supporting-arms T T when the oven is open and adapted to be engaged by fingers *i'* on levers I and rolled thereby into the oven when the same is closed, all constructed and arranged substantially as and for the purpose described.

5. The combination of the portable furnace A, having an oven at top provided with a hinged portion, *h*, and door G, the levers I I, having rearwardly and upwardly curved arms for forming journal-bearings *i* near their pivots and upstanding fingers *i'* near their outer ends, the centrally-pivoted levers K, and the links J, L, and *l*, connecting levers K with the levers I and portion *h*, and the rod M and bars O *o*, connecting said levers I with the door G, with the arms T T and the cylinder P, having journals *r* and *q*, the latter being hollow, all constructed and arranged substantially in the manner and for the purpose described.

In testimony that I claim the foregoing as my own I affix my signature in presence of two witnesses.

ISAAC CORRY GORDON.

Witnesses:

WM. MAPPUS,

RICHARD JAHN.