(No Model.)

H. C. DURBOROW.

SUPPORTING BRACKET FOR SPOUTS, PIPES, &c.

No. 329,823. Patented Nov. 3, 1885.

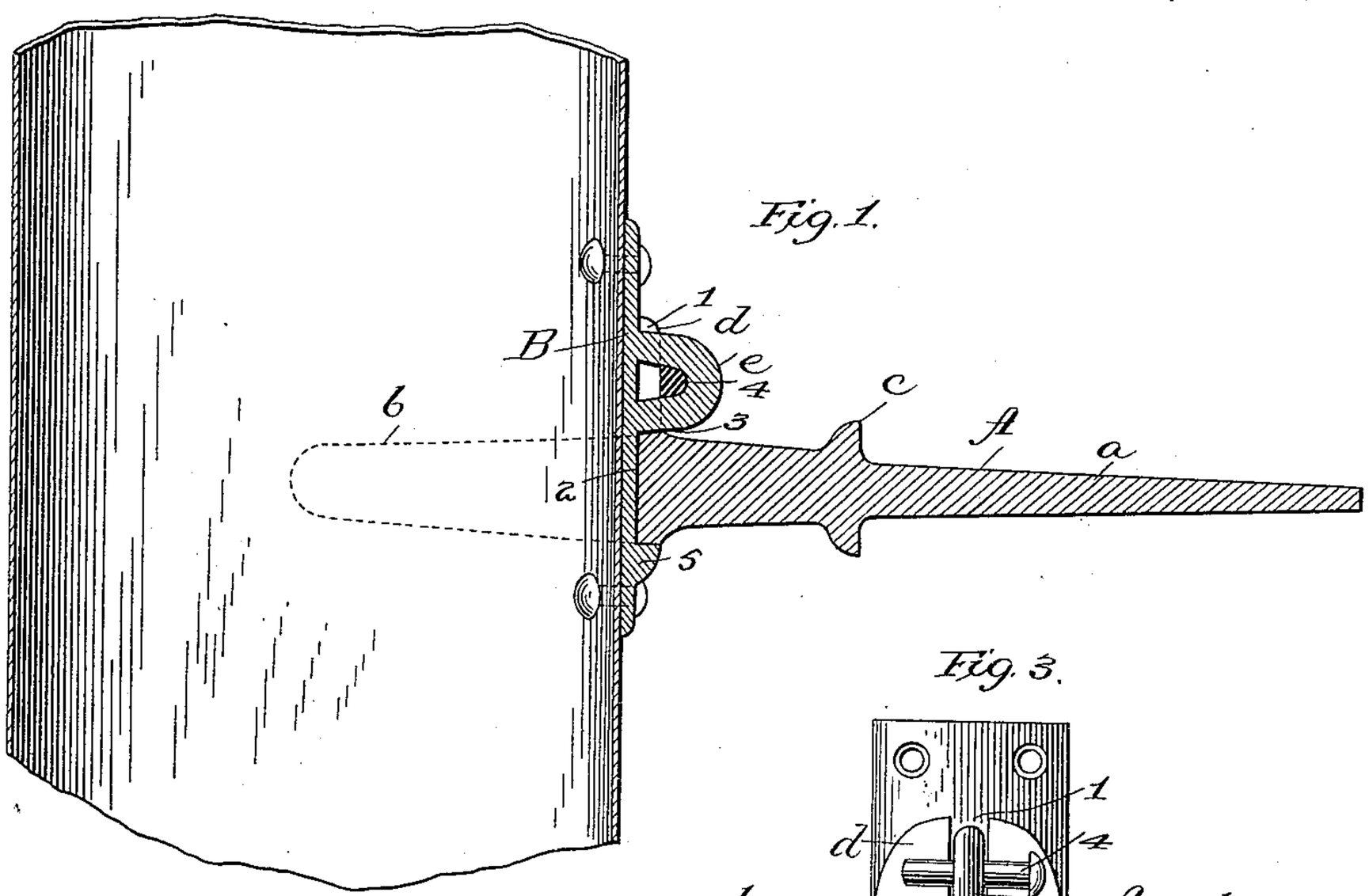

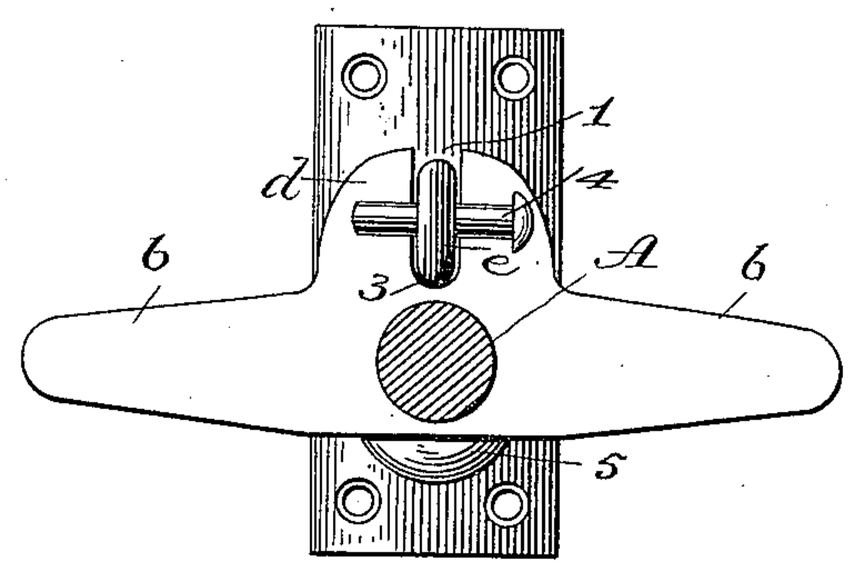

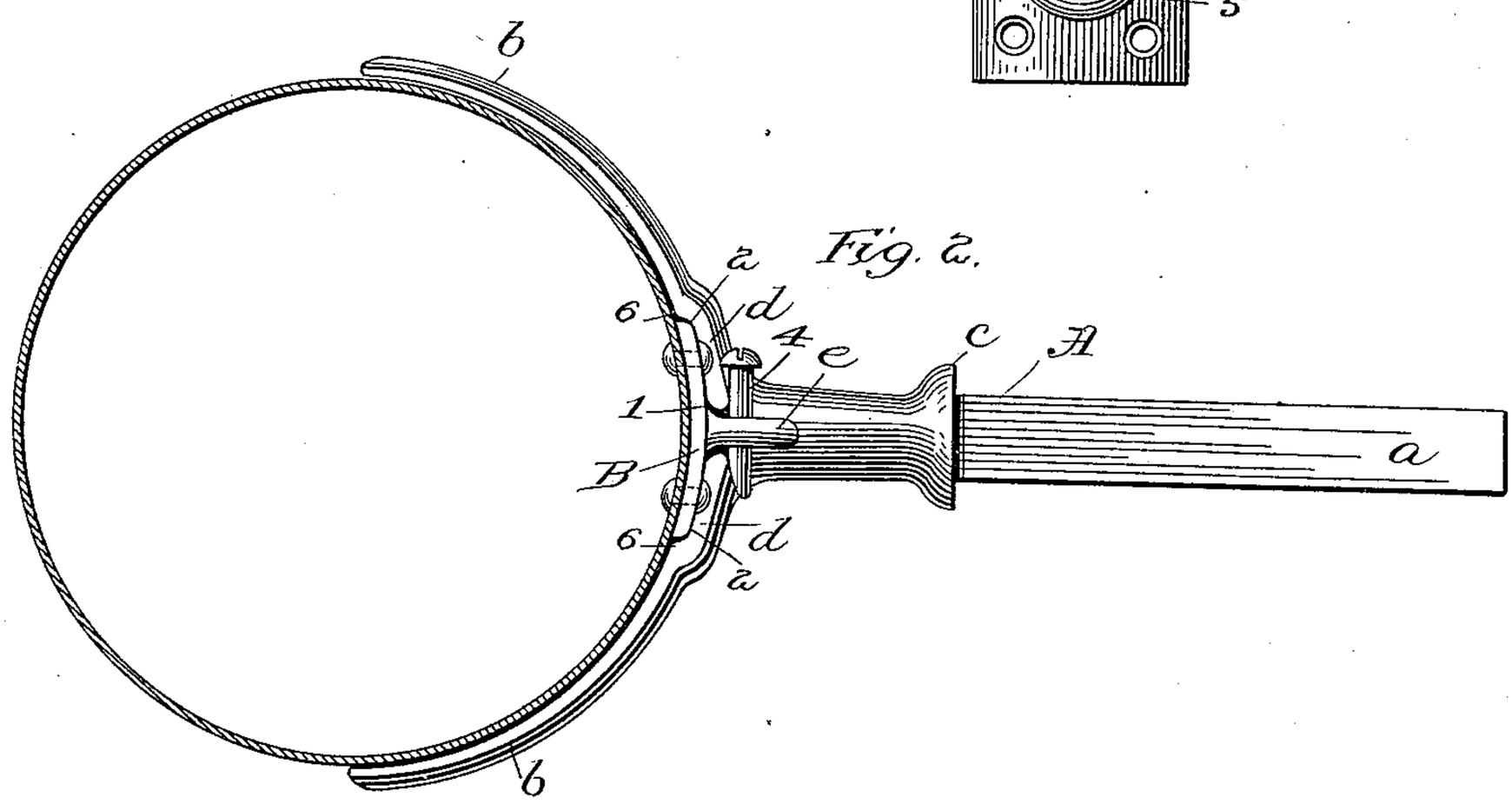

Attest:
Walter Donaldson
F. L. Middleton

Inventor
Henry Clay Durborow
by Joyce & Spear
Attys.

N. PETERS, Photo-Lithographer, Washington, D. C.

UNITED STATES PATENT OFFICE.

HENRY CLAY DURBOROW, OF INDIANAPOLIS, INDIANA.

SUPPORTING-BRACKET FOR SPOUTS, PIPES, &c.

SPECIFICATION forming part of Letters Patent No. 329,823, dated November 3, 1885.

Application filed April 29, 1885. Serial No. 163,899. (No model.)

To all whom it may concern:

Be it known that I, HENRY CLAY DURBOROW, of Indianapolis, in the county of Marion and State of Indiana, have invented a new and useful Improvement in Supporting-Brackets for Spouts, Pipes, Eaves-Troughs, &c.; and I do hereby declare that the following is a full, clear, and exact description of the same.

My invention relates to the hanging or supporting of eaves-troughs, rain-spouts, pipes, &c., and is more particularly an improvement in that class of devices especially designed for securing and supporting rain-spouts of buildings.

The object of my invention is to furnish an inexpensive and durable article combining lightness and strength, and of such simplicity in construction that it may be handled by unskilled persons, and fitted in proper position to securely hold the spout without the use of nails, screws, or bolts.

Another object which I have in view is to provide a device capable of firmly holding the spout at a short distance from the wall of the building, in order that free and easy access may be had to all portions of the spout, and also to that portion of the wall lying behind it, for the purposes of painting, repairing, &c.

Another object of my invention is to enable the workman to remove or replace one section of pipe without damaging the other sections.

My invention consists in the details of construction and arrangement of the parts, all hereinafter particularly described, and pointed out in the claims.

In the accompanying drawings, Figure 1 is a central vertical section through a portion of the spout, showing the supporting-iron in section. Fig. 2 is a plan view of the bracket, the spout being shown in cross-section. Fig. 3 is a rear view of the bracket and the attaching-plate.

In the drawings, A represents the supporting iron or bracket. It is provided with a shank, *a*, adapted, by being wedge-shaped, to to be driven into the wall of the building between the bricks or stones; or, if it is desired to apply the device to a frame building, this shank may be screw-threaded for that purpose. The outer end of the bracket terminates in furcated arms *b b*, formed approximately into a semi-circle, for embracing the spout and affording sufficient support against lateral strain. At a proper point between the arms *b b* and the inner end of the shank *a* is formed a shoulder, *c*, for the purpose of giving a bearing-surface to the bracket against the wall, and for determining the distance from the wall at which the spout shall be held, thereby keeping this distance uniform throughout the different sections. Outside of the shoulder *c* the bracket is made especially strong, and just in the rear of the furcated arms an upturned flange or lip, *d*, is formed, in which is cut or formed a slot, 1, extending preferably vertically.

The device for attaching the spout to the bracket is now to be particularly referred to, being represented at B on the drawings. This consists, as shown, of a plate formed or secured onto the outer surface of the spout by means of rivets, bolt, or screws, and fitted accurately to the curve thereof. It is of sufficient length to extend vertically between the arms *b b* of the bracket and beyond them upon either side. A seat, 2, is formed for the plate at the junction of the furcated arms, of sufficient depth to make a flush joint and allow the arms to bear snugly against the pipe or spout. From the upper portion of the plate a stud, *e*, projects inwardly through the slot in the upturned flange *d*, its lower side resting upon the bottom of the slot as at 3, whereby the weight of the spout is sustained. A pin, 4, passing through a slot or hole in the stud and bearing upon the sides of the flange *d*, also helps to sustain the weight, but its function is more particularly limited to resisting any tendency of the spout to move outward and to drawing the plate B firmly to its seat. This pin is preferably wedge-shaped. On the plate, and at a distance from the stud *e* equal to the depth of the bracket, a small lug, 5, is formed, adapted to fit close against the bracket on the under side and prevent the spout from being pushed up. As the distance between the stud *e* and lug 5 is just equal to the depth of the bracket, as before stated, a tight joint will be made, and the lug 5 will resist also lateral strain upon the pipe. From this construction it will also be seen that the plate B, lying between the shoulders 6 6 of its seat, together with the stud *e* in the slot 1,

prevents the spout from being turned from any cause, and it will also be readily observed that although the pipe or spout is securely held against strain from all directions it may be detached from the bracket in a moment by simply removing the pin 4.

Instead of driving or screwing the shank into the wall or frame work of the building, the bracket may be formed with a base-plate, and nails, screws, or bolts be used to secure it in place. The bracket may be set at any angle to suit the inclination of the spout without changing its effectiveness; or by omitting one of the arms *b* and extending the remaining arm in the same curve a short distance the bracket may be used very effectively as an eaves-trough hanger.

The manner of supporting the spout at a distance from the wall prevents the leakage from the spout from damaging or defacing the building, and at the same time allows free access to be had to all parts of the pipe and wall for repairs, painting, &c.

Having thus described my invention, what I claim is—

1. A device for supporting eaves-troughs, pipes, &c., and in combination, a bracket or supporting-iron having a slotted flange or lip, *d*, a plate secured to the spout and provided with a stud adapted to the said slot, means for holding the stud within the slot, and a groove or seat formed on the bracket, adapted to receive the plate, all substantially as described.

2. In combination with the bracket, adapted to be attached to the wall, the stud *e* and lug 5, secured to the spout and bearing upon the bracket upon either side thereof, and means for holding the spout to the bracket against outward movement, all substantially as described.

In testimony whereof I have signed my name to this specification in the presence of two subscribing witnesses.

HENRY CLAY DURBOROW.

Witnesses:
ZENO W. COFFIN,
CHAS. R. HASELY.