(No Model.) 2 Sheets—Sheet 1.

D. L. KEELER.

SEWING MACHINE.

No. 255,633. Patented Mar. 28, 1882.

Fig. 1

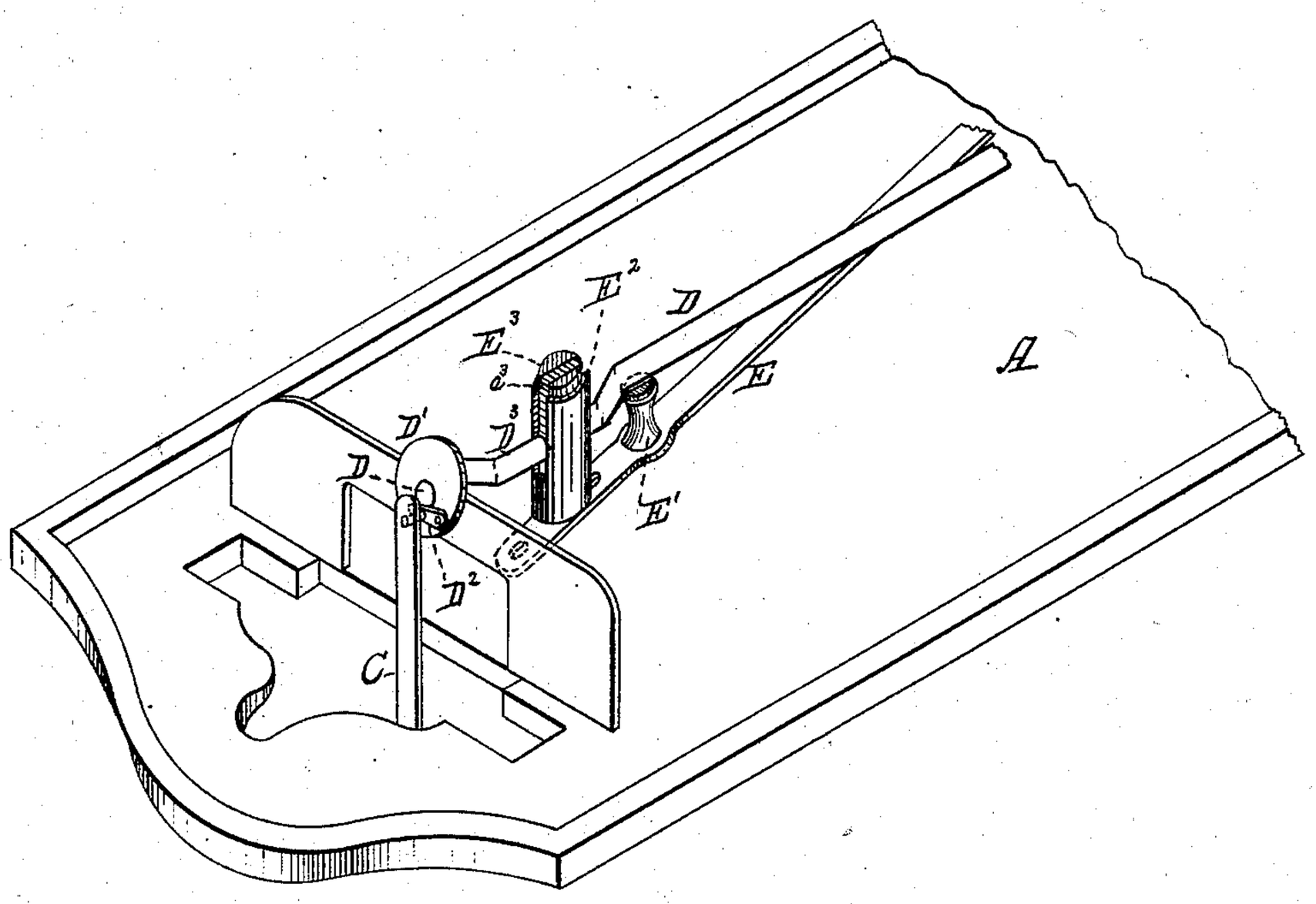

Witnesses,
Phil W. Hale
W. B. Chaffee

Inventor,
David L. Keeler,
by W. B. Hale, Associate Attorney,
for W. W. Leggett,
Attorney

N. PETERS, Photo-Lithographer, Washington, D. C.

(No Model.)

2 Sheets—Sheet 2.

D. L. KEELER.

SEWING MACHINE.

No. 255,633. Patented Mar. 28, 1882.

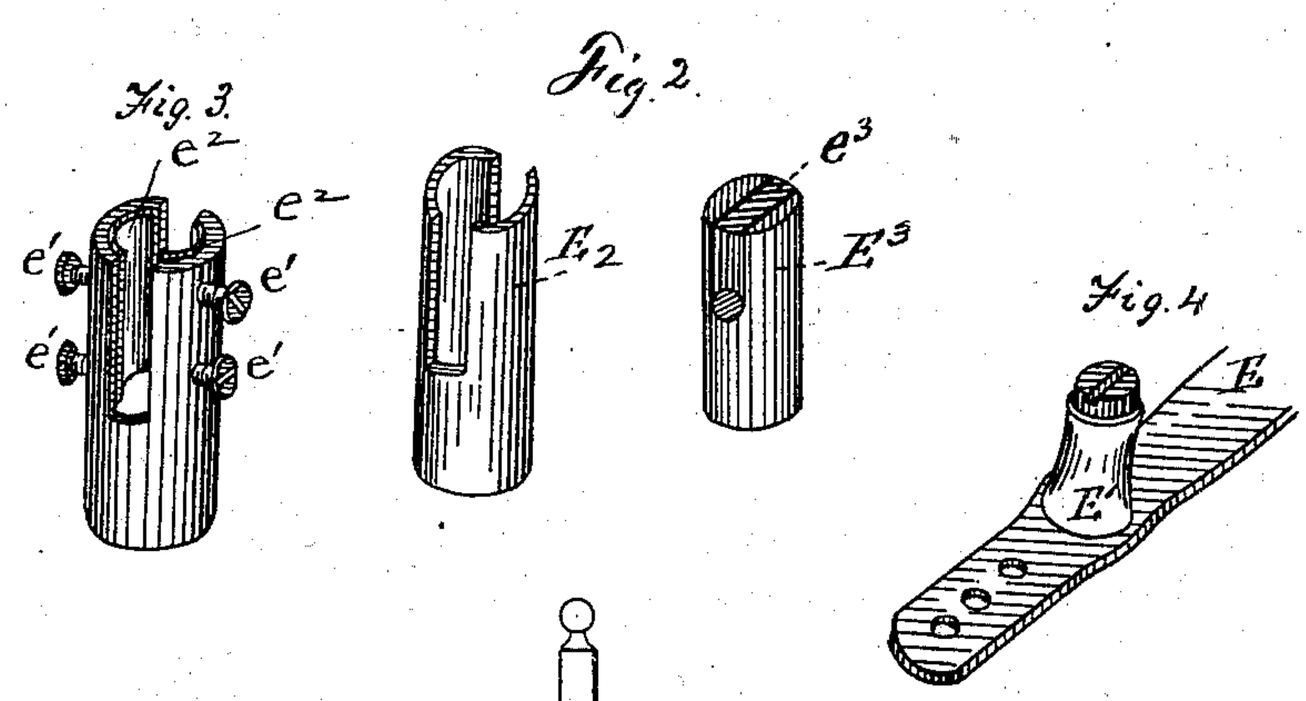

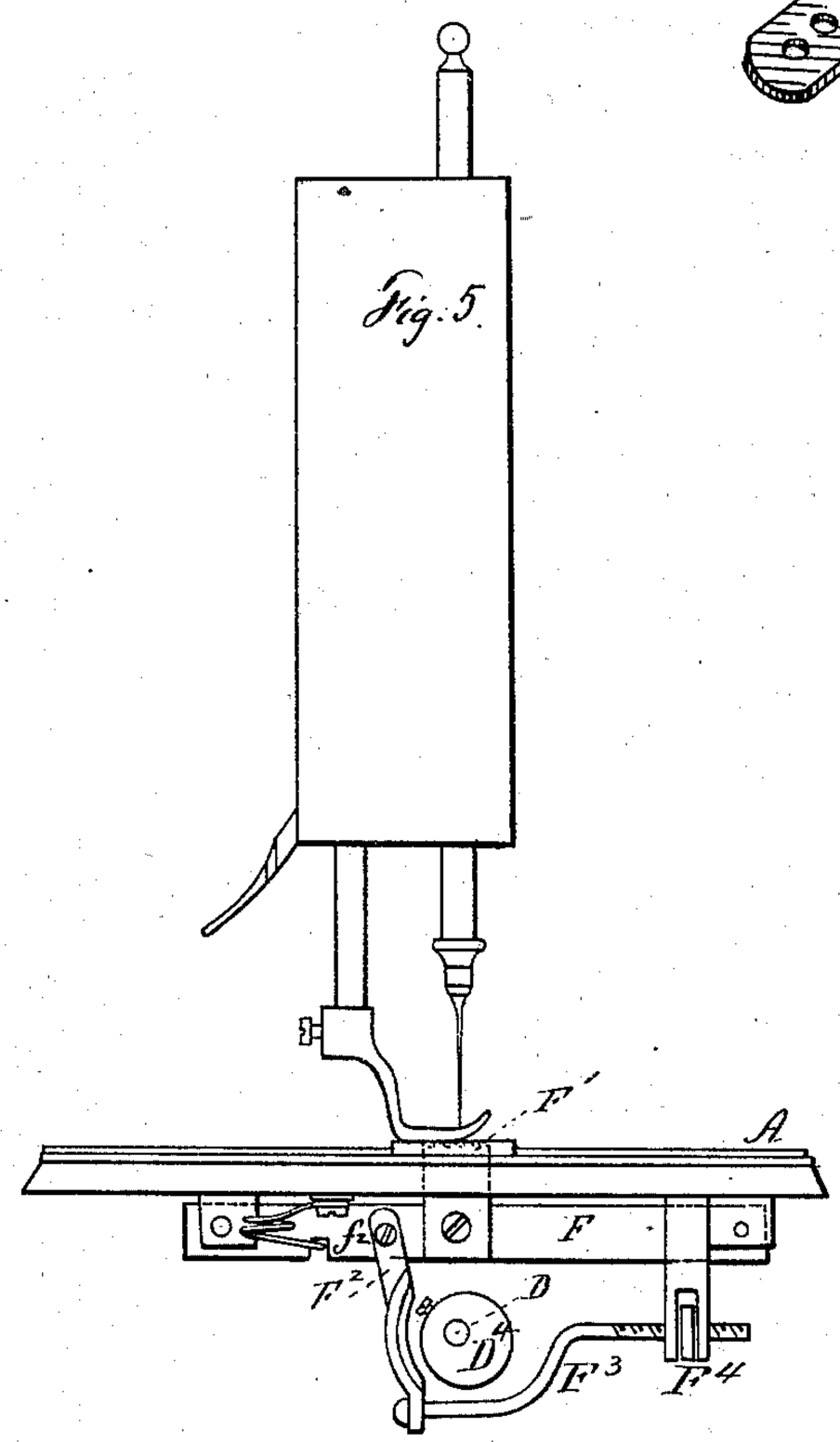

WITNESSES

J. E. Thomas

Henry F. Dieterich

INVENTOR

David L. Keeler

By C. W. Seggett.

ATTORNEY

N. PETERS, Photo-Lithographer, Washington, D. C.

UNITED STATES PATENT OFFICE.

DAVID L. KEELER, OF GRAND RAPIDS, MICHIGAN.

SEWING-MACHINE.

SPECIFICATION forming part of Letters Patent No. 255,633, dated March 28, 1882.

Application filed July 11, 1881. (No model.)

To all whom it may concern:

Be it known that I, DAVID L. KEELER, of Grand Rapids, county of Kent, State of Michigan, have invented a new and useful Improvement in Drive Mechanism for Sewing-Machines; and I declare the following to be a full, clear, and exact description of the same, such as will enable others skilled in the art to which it pertains to make and use it, reference being had to the accompanying drawings, which form a part of this specification.

My invention consists in a novel combination of devices for transmitting motion from the driving-shaft to the feed and shuttle, as will be hereinafter particularly described, and pointed out in the claims.

In the drawings, Figure 1 is a perspective view of a portion of the under side of a sewing-machine inverted, showing the connection between the feed-shaft and the shuttle-lever. Fig. 2 is a perspective view of the sliding journal-box and its casing separated. Fig. 3 is a perspective view of a modification of the casing. Fig. 4 is a perspective view of a portion of the shuttle-lever, showing its pivot. Fig. 5 is a view partly in elevation and partly in section, illustrating the feed devices.

The letter A designates the bed-plate of the machine.

D D is a feed-shaft running longitudinally of the machine. D′ is a disk at its end; and D^2 a link pivoted eccentrically on the outer face of the disk, whereby it is connected with the pitman C.

E is the shuttle-lever, pivoted at E′ to the bed-plate of the machine.

E^2 is a slotted tubular projection, which embraces and has fitted within it a sliding journal-box, E^3, which sliding journal-box receives the crank D^3 in the shaft D. The sliding box E^3 not only has a longitudinal sliding movement in the projection E^2, but a rotary movement in following the crank. The projection E^2 may be made adjustable upon the shuttle-lever, so as to provide for an adjustment of the throw of the shuttle. The operation of this part of the mechanism will be now understood. Motion is communicated to the feed-shaft by the pitman C and the link D^2. As the shaft D revolves its crank D^3 in turning causes the shuttle-lever to oscillate about the pivot E′, and the sliding journal-box E^3 moves with the crank and slides longitudinally in the tubular projection E^2 while at the same time sliding, and slides longitudinally along the crank, and thus conforms easily to all the movements of the crank and shuttle-lever.

I will now describe the feeding mechanism.

It is the object of this part of my invention to provide a feeding device in which the teeth shall always start from the same point at each stroke, and then for different lengths of stitch the throw of the teeth is subtracted from the other end of their stroke. To this end, F is the feed-bar, and F′ its teeth. F^2 is an arm projecting down contiguous to the cam or eccentric D^4. I then provide for the adjustment of the length of stitch by adjusting this arm nearer to or farther from the eccentric without altering in any way the informal position of the feed-bar and its teeth. To accomplish this end I pivot the arm F^2 to the feed-bar at f^2. A connecting-rod, F^3, passes through a stationary or swivel nut, F^4, by means of which the arm F^2 is adjusted.

A machine constructed as above described presents many advantages: The motion of the drive-shaft is communicated to the feed-shaft by a single-bar pitman without mechanism of any kind. The shaft D, which is driven by the pitman, operates directly the shuttle-lever and the feed by positive movement; and, moreover, the feed mechanism, since its teeth always take hold of the goods at the same point with respect to the needle, it follows that it will operate under precisely the same conditions for every length of stitch. The structure throughout is greatly cheapened and simplified, friction is reduced to a minimum, and the machine is rendered a very light-running device.

To prepare the journal-box for the insertion of the crank, I slot it from one end and then, after the crank is inserted, plug it up tight with leather, rawhide, or its equivalent, e^3. Should the sliding box become loose within its bearings any of the usual means may be employed for compensating in the said manner. As, for instance, the wearing surfaces within the projection E^2 may be in the nature of loose plates e^2, which may be adjusted snugly against the sliding box by set-screws e', as shown in the modification Fig. 4. In like manner any of

the journals may be provided with the usual means of take-up lost motion.

What I claim is—

1. The combination, with the feed-shaft having crank D^3 and the shuttle-lever provided with the slotted tubular projection E^2, of the journal-box E^3, embracing said crank and having a sliding movement thereon, and fitted to slide vertically in said tubular projection and to permit the same to rock upon it, substantially as described.

2. The combination, with the feed-bar F, carrying the feed-dog F′, of the arm F^2, pivoted to said feed-bar, the rod F^3, jointed to said arm F^2 at one end, and having its other end adjustably secured, the cam D^4, fixed upon the shaft D, and a suitable spring for returning the feed-bar after its forward stroke, all constructed and arranged to operate substantially as described.

In testimony whereof I sign this specification in the presence of two witnesses.

DAVID L. KEELER.

Witnesses:
WM. WOODWARD,
ALFRED D. RATHBONE.