H. A. DEAL & J. P. GREELEY.

Spinning Machine.

No. 238,492. Patented March 8, 1881.

Fig. 1

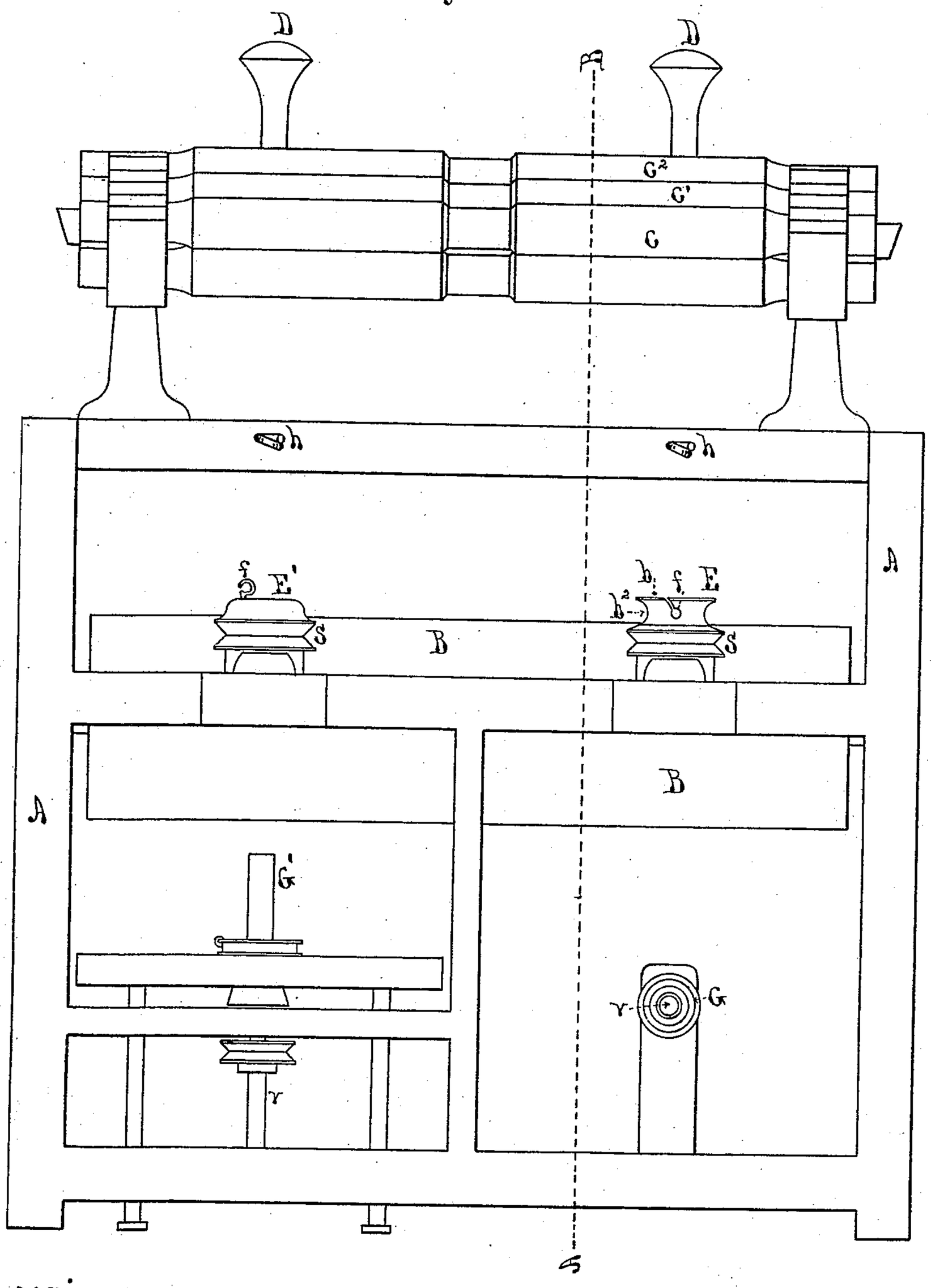

Witnesses
Wm. S. Brown
A. Brown

Inventors
H. A. Deal and J. P. Greeley
by Wesley C. Price
Attorney

N. PETERS, PHOTO-LITHOGRAPHER, WASHINGTON, D. C.

H. A. DEAL & J. P. GREELEY.

Spinning Machine.

No. 238,492. **Patented March 8, 1881.**

Fig. 2

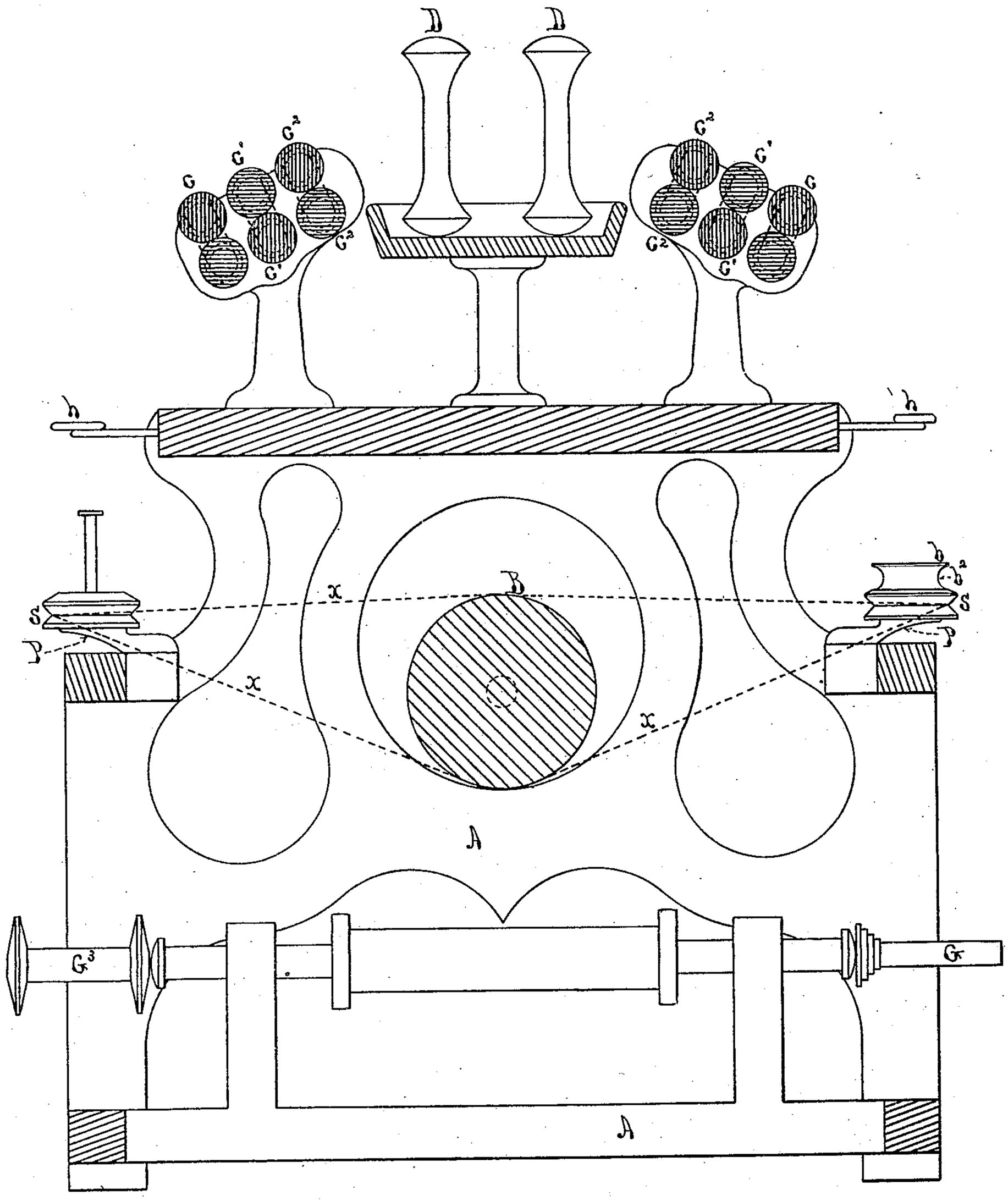

Witnesses

Wm. S. Brown

N. Brown

Inventors

H. A. Deal and J. P. Greeley

by Dupine C. Rice

Attorney.

N. PETERS, PHOTO-LITHOGRAPHER, WASHINGTON, D. C.

H. A. DEAL & J. P. GREELEY.

Spinning Machine.

No. 238,492. **Patented March 8, 1881.**

Fig. 3

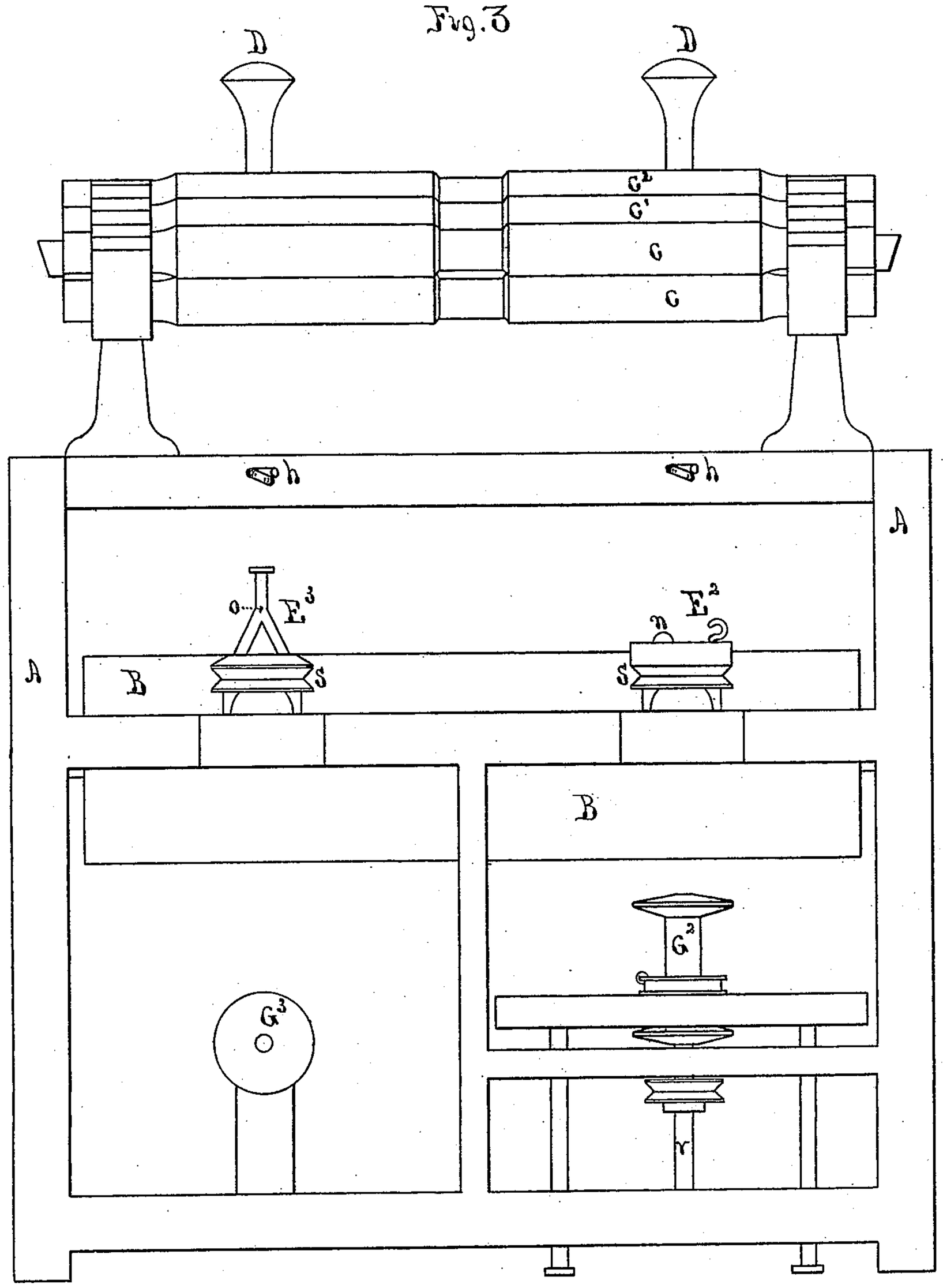

Witnesses.

Wm. S. Brown

N. Brown

Inventors

H. A. Deal and J. P. Greeley

by Benjamin C. Dodge

Attorney

N. PETERS, PHOTO-LITHOGRAPHER, WASHINGTON, D. C.

H. A. DEAL & J. P. GREELEY.

Spinning Machine.

No. 238,492. **Patented March 8, 1881.**

Fig. 4

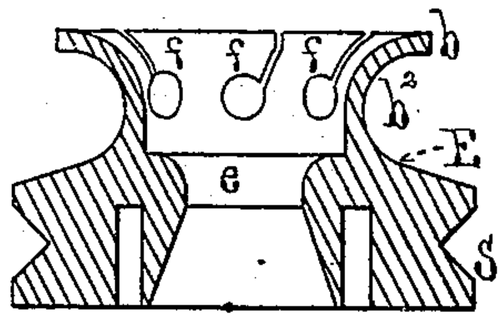

Fig. 12

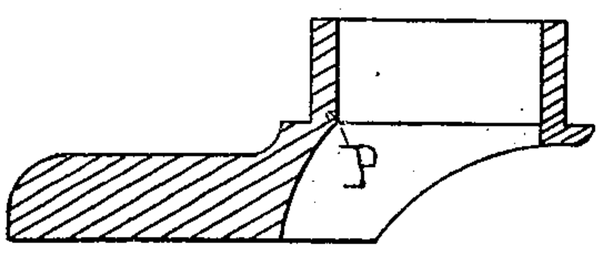

Fig. 5

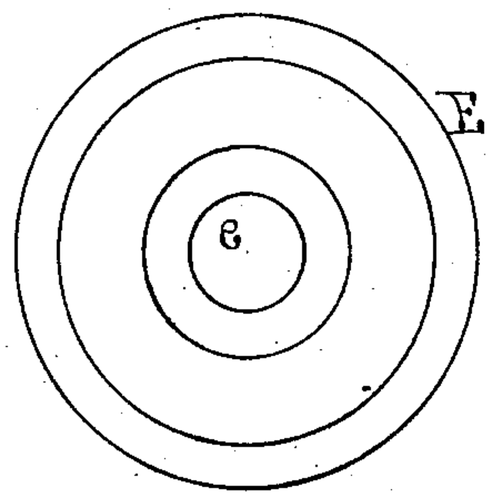

Fig. 8

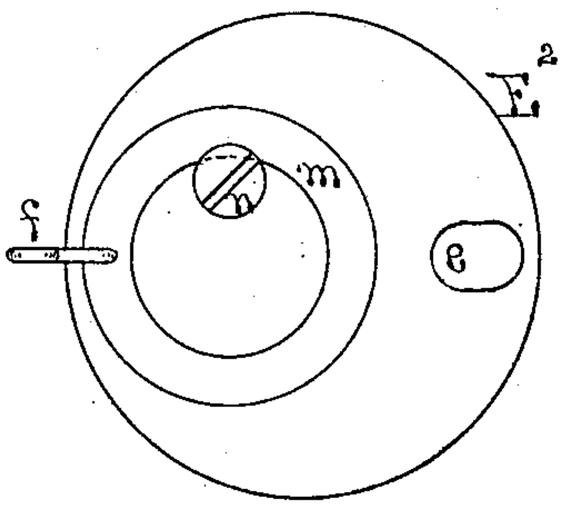

Fig. 10

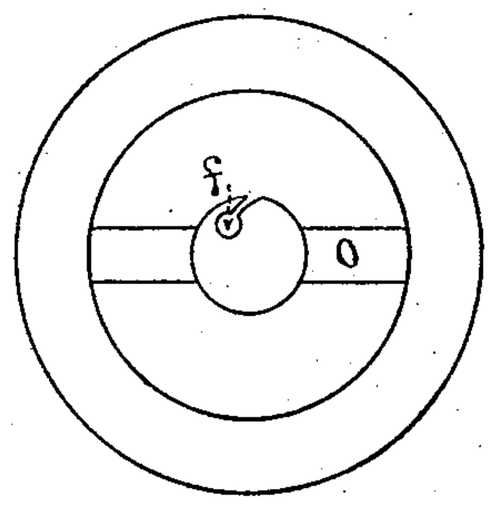

Fig. 6

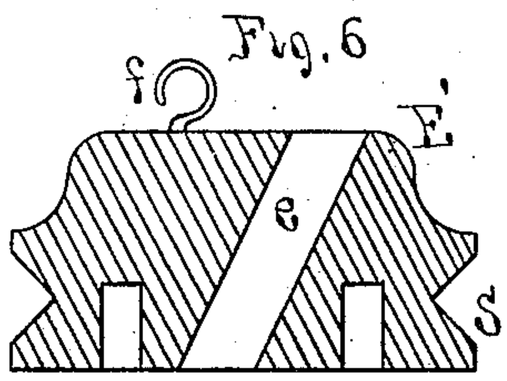

Fig. 9

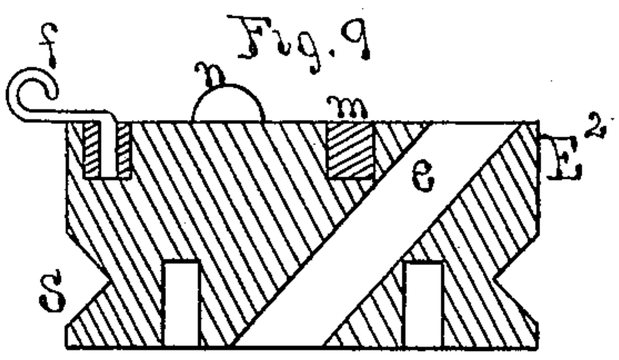

Fig. 7

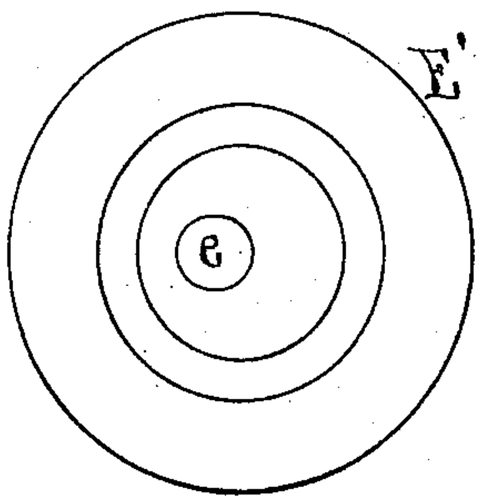

Fig. 11

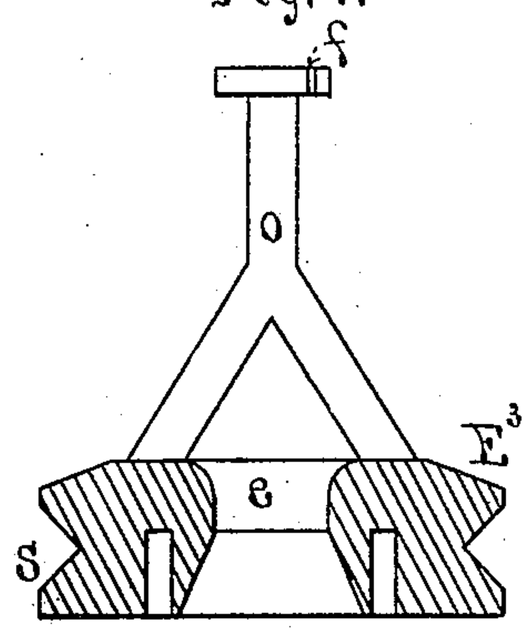

Witnesses

Wm. S. Brown

N. Brown

Inventors

H. A. Deal and J. P. Greeley,
by Crepine & Rice
Attorneys

N. PETERS, PHOTO-LITHOGRAPHER, WASHINGTON, D. C.

UNITED STATES PATENT OFFICE.

HASLUM A. DEAL AND JOHN P. GREELEY, OF NASHUA, NEW HAMPSHIRE, ASSIGNORS TO HAVEN C. PERHAM, OF LOWELL, MASSACHUSETTS.

SPINNING-MACHINE.

SPECIFICATION forming part of Letters Patent No. 238,492, dated March 8, 1881.

Application filed October 16, 1879.

To all whom it may concern:

Be it known that we, H. A. DEAL and JOHN P. GREELEY, of Nashua, in the county of Hillsborough and State of New Hampshire, have invented a new and useful Improvement in Spinning-Machines, of which the following is a specification.

The invention relates to machines which spin into yarn a roving or roping prepared by other machinery.

The object of our invention is to provide a spinning-head for spinning-machines in which the yarn being twisted can be easily adjusted to have any desired tension to increase the amount of draft according to the amount of twist to be put in it; to provide a mechanism in which this spinning-head can be combined with delivering rollers and spindles, so that by a suitable traverse motion the yarn being spun may be drawn and laid on spools or bobbins; to combine the said spinning-head with a spindle and ring, so that a greater amount of twist can be put into yarn in a given period of time than can be done by either device separately.

The nature of the invention will fully appear from the subjoined description, when considered with reference to the accompanying drawings, forming part of this specification, in which similar letters of reference indicate like parts.

Figure 1 is an elevation of the machine. Fig. 2 is a section on the line A B, Fig. 1. Fig. 3 is an elevation, showing a different arrangement of parts from that shown in Fig. 1. Figs. 4 to 11 represent details of the several spinning-heads, and Fig. 12 the hollow stud on which the head runs.

A is the frame; B, the drum.

c c' c^2 are pairs of drawing and delivering rolls, which are arranged and driven as in ordinary spinning-frames.

D D are the spools upon which the roving is wound before being placed upon the machine.

E E' E^2 E^3 are the spinning-heads, having the passage e through them, and the eyes or hooks f f f formed in or placed upon their upper surfaces. These hooks or eyes are used to carry the yarn to guide and give it different degrees of draft or tension.

G G' G^2 G^3 are spools or bobbins upon which the yarn spun is wound. These spools or bobbins are placed upon spindles located at right angles to the axis of rotation of the spinning-head, as shown at G G^3, or they may be placed upon spindles standing in a line coincident with such axis, and the yarn laid upon the bobbin by a ring and traveler having the ordinary traverse motion used in ring-spinning frames. When placed in this latter position the spindles are driven as well as the spinning-head, whereby a greater twist may be given to the thread than would be given by the head alone, and therefore a greater amount of yarn can be produced, or a greater amount of twist put into the yarn, if desired, by this machine, when so constructed, than can be produced by either a ring-spinning machine, or by our machine using the head alone.

h h are guide-wires, through which the roving is passed before being taken to the spinning-head.

m is a ring, into which the eye f is fastened. This ring is set into the spinning-head eccentric to the axis of rotation of the head, and is retained in position by the clamp-screw n.

o is an arm holding the eye f, as seen, upon head E^3, at an elevation centrally above the head.

P is a hollow stud, upon which the spinning-head E is placed and revolved. This stud is attached to the frame A in any suitable manner, and the head E has an annular groove cut into it, which fits the stud and forms a bearing-surface in the head, parallel and on the same plane with the belt or band x, which drives the whirl s, which is formed upon or attached to the spinning-head. The spinning-head, extending downward through the hollow stud, forms a bearing upon the outside of the extension, which is protected from dust or dirt, and the whirl formed on or attached to the head, projecting downward over the outside of the stud, forms a cap or cover, which prevents the entry of any foreign substance which may fall upon the spinning-head or adjacent parts.

v v are the spindles upon which the spools G G' G^2 G^3 are placed. These spindles are substantially formed as is usual in spinning

machinery. When placed at right angles to the axis of rotation of the spinning-head they are driven only sufficiently fast to wind the thread spun upon the bobbins or spools placed upon them; but when placed in line coincident with the axis of rotation of the spinning-head and a ring and traverse used they may be driven at any speed desired, thus using the ring and spindle as auxiliary devices to the spinning-head, doing the work both would do operating separately.

The eyes or hooks of the spinning-head can be formed in several different ways, as will be seen on the heads E E′ E^2 E^3.

At E it will be seen that the head is carried up in an expanded edge or collar, *b*, which is perforated with several holes within a semicircumference, forming eyes through which the yarn is carried. These eyes are made open by slots cut from the edge of the collar to the eyes to facilitate the introduction of the yarn. When the eyes are made in this manner the passage through the head may be central and on the line of the axis of rotation of the spinning-head. The collar *b* has a groove upon its outer surface, b^2, in which the yarn is retained as it passes from one eye to another. When so constructed the yarn is passed through one of the eyes, and carried upon the outside of the collar to or past one or more of the others, whence it returns through one of them, and passes downward through the center of the spinning-head to the bobbin G, on which it is wound. The yarn is thus held while being spun by the rotation of the spinning-head. If the drag or tension is not of the proper degree it can be changed by carrying the yarn, after passing through one eye, a greater or less distance around the collar before passing it back through another eye and the central opening, *e*.

At E′ will be seen a modification of the spinning-head, by which the upper end of the opening *e* is made to perform the office of one eye by being commenced one side of the line of the axis of rotation of the spinning-head. This head can therefore be used with but one eye. This eye may be made adjustable, as shown at E^2, by being attached to a ring eccentric to the axis of rotation of the spinning-head and set in a corresponding channel formed in the head.

At E^3 is shown another modification of the spinning-head having a guide-eye elevated centrally upon an arm. This form can be used in combination with or independent of the modifications before described.

What we claim as new, and of our invention, is—

1. The spinning-head E, formed with a central orifice, *e*, through which only the yarn passes, and provided with two or more eyes, *f f f*, for the passage of the yarn placed on the same circumferential line and within a semicircumference of the head, substantially as described.

2. The spinning-head E, provided with the circumferential groove b^2, extending entirely around it, and eyes *f*, through which the yarn can be drawn a greater or lesser distance, as may be desired, substantially as described.

3. The combination of the drawing-rolls *c* *c′* c^2 and spindle *v* with a spinning-head placed between the drawing-rolls and the spindle, and having two or more frictional guide-eyes upon a plane substantially at right angles to its axial line, over which the yarn being spun is drawn to obtain a constant and equable frictional tension, substantially as described.

4. The combination of the drawing-rolls *c* *c′* c^2, spindle *v*, and spinning-head E placed between the last pair of drawing-rolls and the spindle, substantially as described.

5. The combination of the drawing-rolls *c* *c′* c^2, spinning-head E, ring-spindle *v*, and its ring and traveler, in the described manner, so that the head shall receive the drawn roving from the rolls, and the spindle receive the yarn from the spinning-head, and increase the twist therein, substantially as described.

H. A. DEAL.
JOHN P. GREELEY.

Witnesses:
LEPINE C. RICE,
DAVID HALL RICE.