(Model.)

2 Sheets—Sheet 1.

R. THOMPSON.

Machine for Swaging Sewing Machine Needle Blanks.

No. 234,931. **Patented Nov. 30, 1880.**

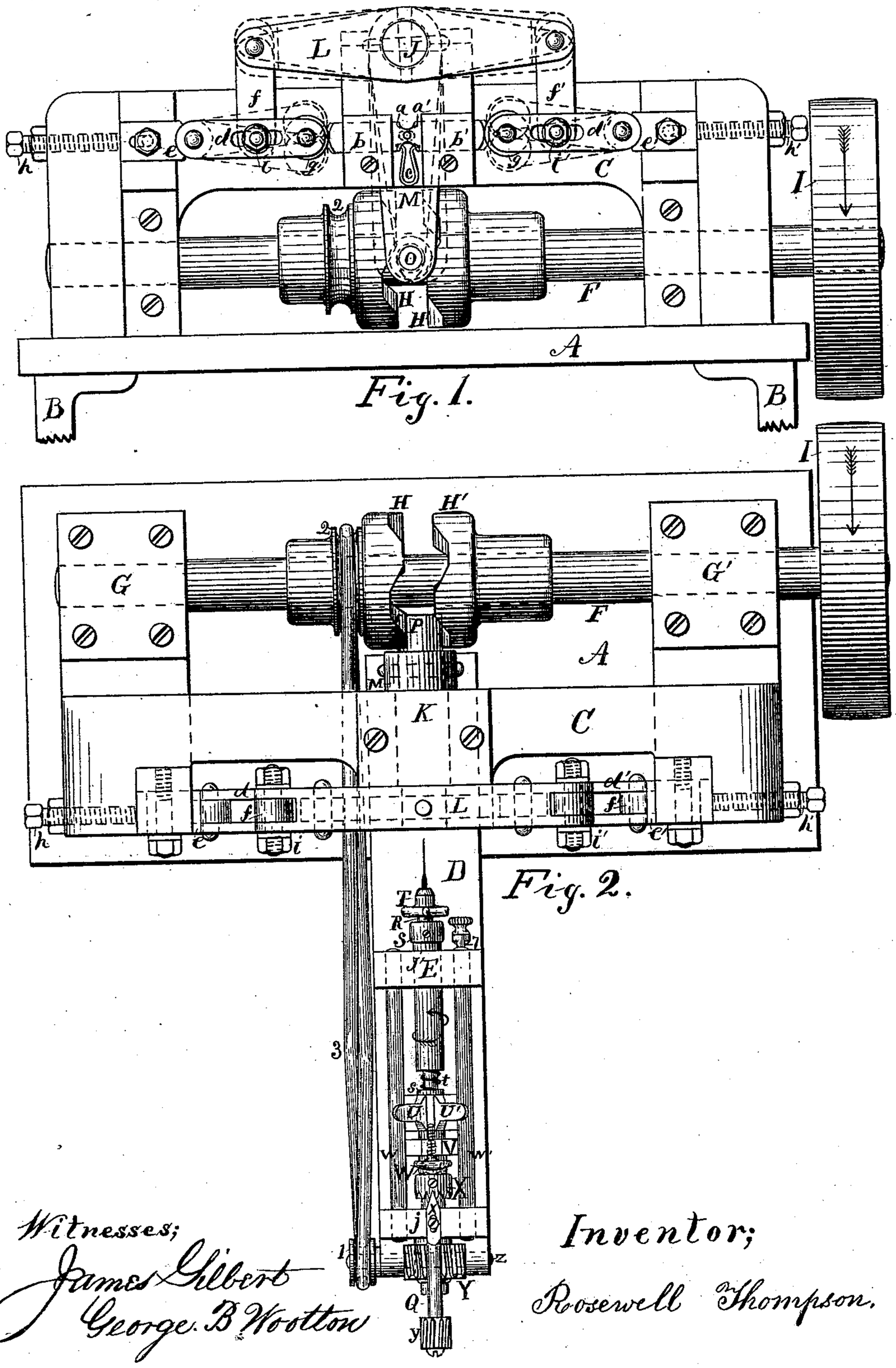

Witnesses;
James Gilbert
George B Wootton

Inventor;
Rosewell Thompson.

N. PETERS, PHOTO-LITHOGRAPHER, WASHINGTON, D. C.

(Model.) 2 Sheets—Sheet 2.

R. THOMPSON.

Machine for Swaging Sewing Machine Needle Blanks.

No. 234,931. **Patented Nov. 30, 1880.**

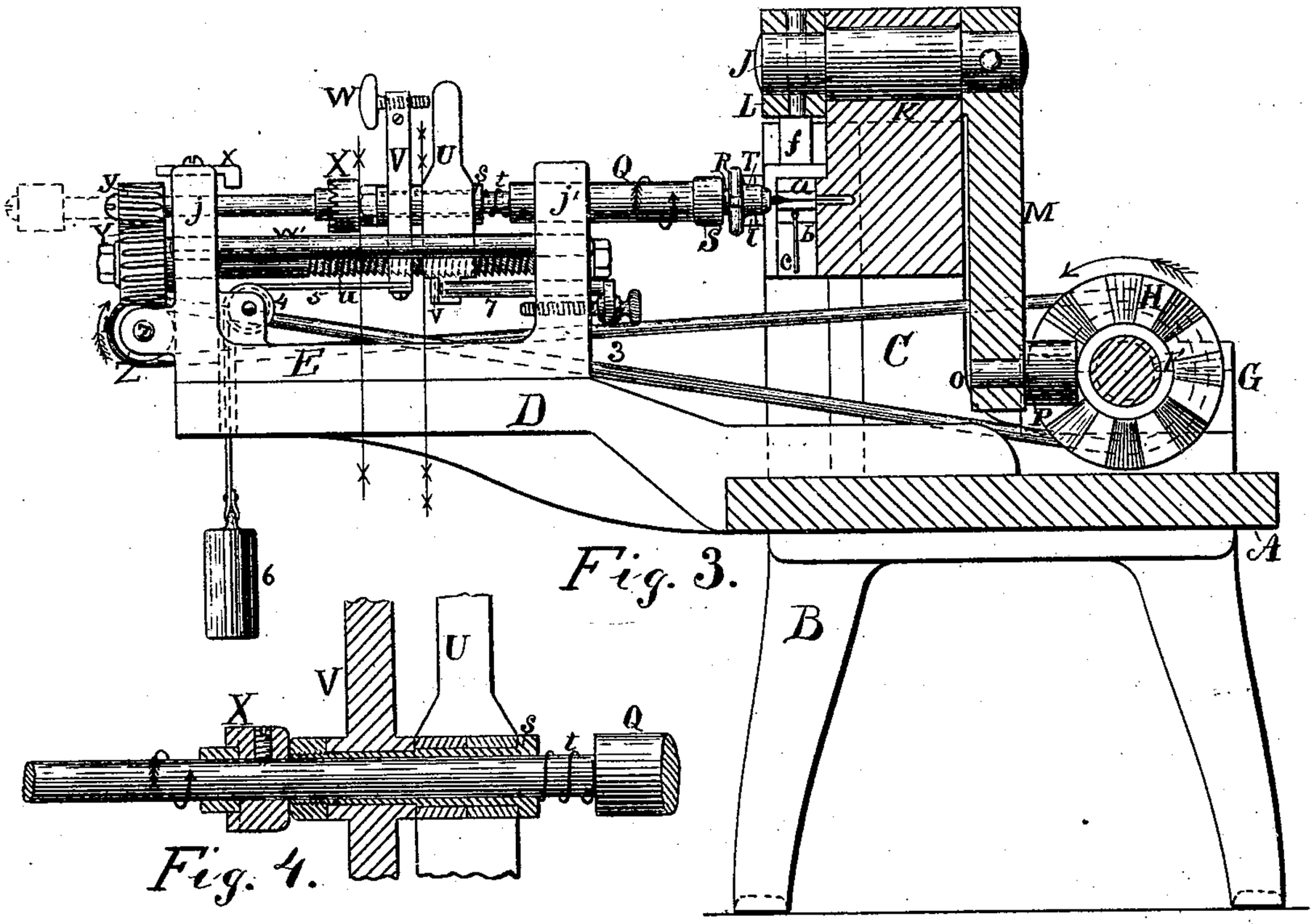

Fig. 3.

Fig. 4.

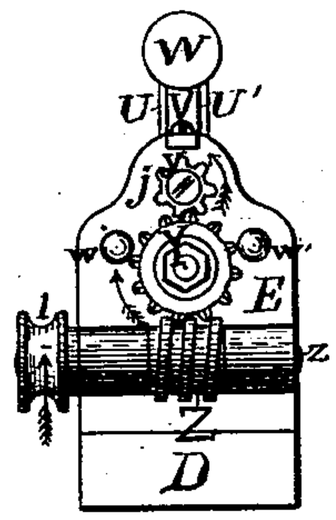

Fig. 6.

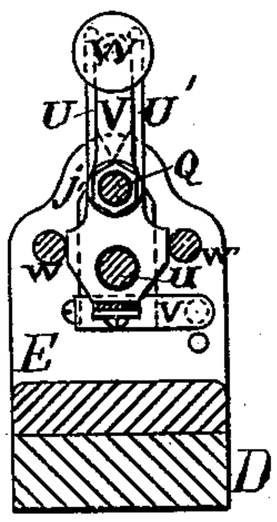

Fig. 7.

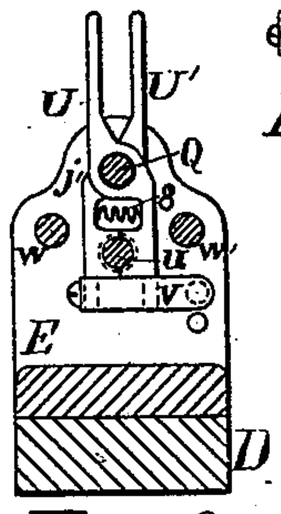

Fig. 8.

Fig. 5.

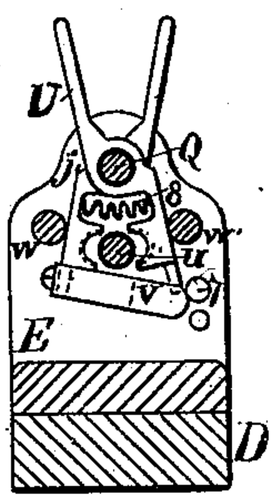

Fig. 9.

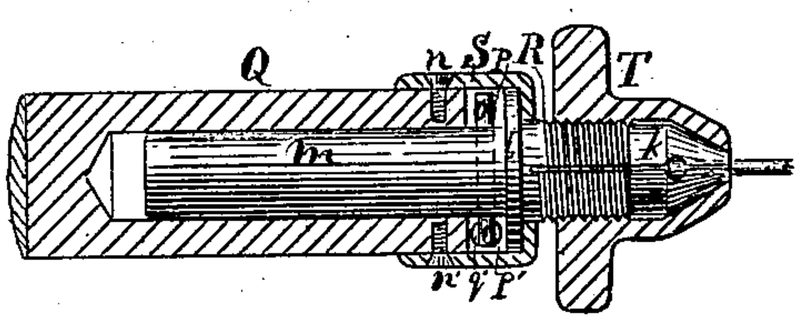

Fig. 10.

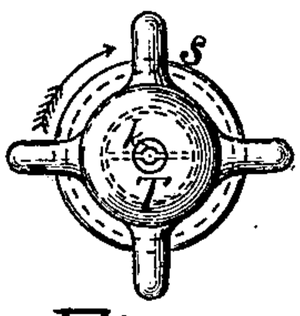

Fig. 11.

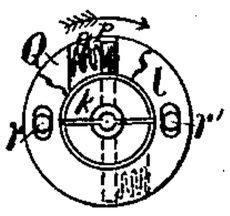

Fig. 12.

Fig. 13.

Witnesses;
James Gilbat
George B Wootton

Inventor;
Roswell Thompson,

N. PETERS, PHOTO-LITHOGRAPHER, WASHINGTON, D. C.

UNITED STATES PATENT OFFICE.

ROSEWELL THOMPSON, OF BRIDGEPORT, CONNECTICUT.

MACHINE FOR SWAGING SEWING-MACHINE-NEEDLE BLANKS.

SPECIFICATION forming part of Letters Patent No. 234,931, dated November 30, 1880.

Application filed July 21, 1880. (Model.)

To all whom it may concern:

Be it known that I, ROSEWELL THOMPSON, of the city of Bridgeport, in the county of Fairfield and State of Connecticut, have invented certain Improvements in Machines for Swaging Sewing-Machine-Needle Blanks and similar articles, of which the following is a specification, with reference to the accompanying drawings.

Machines for swaging wire to reduced size or change of form have generally been so constructed as to produce a great deal of noise when in practical operation, thus making them quite disagreeable to the attendant and all who are required to remain in the same room with said machines; and my improvement consists in applying and combining certain mechanical movements and devices in such a manner as to produce a machine for swaging wire blanks which shall be quite as satisfactory in its results as any heretofore constructed and at the same time be more quiet in its operation, and thus I overcome the principal objection to the use of swaging-machines.

My invention also includes improved mechanism for guiding and controlling the wire blanks to be operated upon by the swaging-dies, said mechanism being constructed upon such a principle and in such a manner as to cause the blanks to be fed between the swaging-dies and removed therefrom automatically, and to enable the operator to change the blanks and bring them in position for swaging, with but very little loss of time between the swaging operations, so that a large quantity of swaged blanks may be produced in a given time, all of which will herein be fully described.

In the accompanying drawings, Figure 1 is a front elevation of my improved swaging-machine with blank-feeding mechanism removed. Fig. 2 is a plan of the same with feeding mechanism attached and with a swaged blank removed from the swaging-dies. Fig. 3 is a section through the center of the swaging-machine and a side elevation of the feeding mechanism with swaged blank in position as when operated upon by the swaging-dies. Fig. 4 is an enlarged sectional drawing of some of the devices attached to the feed-spindle, so as to clearly show the construction of the same. Fig. 5 is a detached view of the spring which locks the feed-clamp to the feed-screw when in practical operation. Fig. 6 is an end view of the feeding mechanism. Fig. 7 is a sectional view of the feeding mechanism through the line *x x*, Fig. 3. Fig. 8 is a sectional view of said mechanism through the line *xx xx*, Fig. 3, with feed-clamp locked to the feed-screw. Fig. 9 is a section through same line, but with the feed-clamp open. Fig. 10 is an enlarged drawing of the blank-griping chuck, showing the manner of securing the same to the end of the feed-spindle, which is shown in section. Fig. 11 is an end view of the griping-chuck and nut and cap which secures the chuck to the spindle. Figs. 12 and 13 are views of the end of the griping-chuck, with nut removed and with a portion of the collar broken away, so as to more clearly show and explain the construction and operation of the devices behind the same.

Similar letters of reference indicate corresponding parts.

A is the bed, B the legs, and C the body, of the swaging-machine. D is an extender, upon which is placed the frame of the feeding mechanism E. F is the driving-shaft, fitted to bearings G G′, and to which are rigidly secured the cams H H′. I is the driving-pulley. J is a rock-shaft fitted to bearing K upon the top of the body of the machine, and to the ends of said shaft are secured the levers L and M, and into the opposite end of the latter is inserted a stud, O, upon which the roll P is fitted to revolve when operated upon by the cams.

a a′ are the swaging-dies, fitted to slide freely in seats *b b′*. *c* is a spring, the ends of which press against the inner ends of the swaging-dies. *d d′* are oscillating levers pivoted at one end to the adjustable blocks *e e′*. *f f′* are connections which unite *d d′* with lever L. *g g′* are rolls fitted to turn freely upon pins near the ends of levers *d d′*, the faces of which are to roll upon the outer ends of the swaging-dies. *h h′* are screws, which regulate the pressure of the rolls upon the swaging-dies. *i i′* are bolts which adjust the positions of the ends of the connections *f f′* upon the levers *d d′*, so as to regulate the degree of oscillation of said levers, which effects the amount of separation of the swaging-dies.

In the feeding mechanism Q is the spindle, fitted to slide and revolve freely in the bear-

ings *j j'*. R is the blank-griping chuck, with jaws made by splitting the tapering end *k*, which receives the blank, and having a collar, *l*, at the base of said jaws, and with a long shank, *m*, to enter and revolve freely in a hole bored into the end of the spindle. Said chuck is secured in its place by means of the cap S over the collar and end of the spindle, being fastened to the latter by means of the screws *n n'*.

o is a pin passing through the shank of the griping-chuck near the collar. Openings *p p'* are made in the end of the spindle for the reception of this pin and springs *q q'*. *r r'* are pins inserted into the end of the spindle, and oblong holes are made in the collar of the chuck for said pins to enter. T is a nut, passing over the jaws of the griping-chuck and fitted to the screw-thread near the collar, and having a thimble upon one side to fit the tapering end of the jaws. *s* is a sleeve fitted to the smaller portion of the spindle, but so as to allow the latter to revolve freely in the same. *t* is a spring placed between the end of the sleeve and the shoulder of the larger portion of the spindle. U U' are a pair of jaws pivoted to the larger portion of the sleeve *s*, having a half-nut near the lower ends of the same to grasp the threads of the ratchet feed-screw *u*, and locked to said screw, when desired, by means of the spring-catch *v*. V is a guide-bar fitted to the smaller portion of the sleeve, and retained in its vertical position by means of the rods *w w*. Into the upper end of said bar is fitted a screw having a large head to form a knob, W, for the palm of the hand.

X is a collar rigidly secured to the spindle, and having sharp-pointed teeth made upon one side. *x* is a device secured to the top of bearing *j*, and having a point upon it to pass between the teeth of the collar X.

Y *y* are gears secured to the ends of feed-screw U and spindle Q, the outer ends of the teeth of the larger gear and inner ends of the teeth of the small gear are pointed, so that the latter may readily engage with the former when brought in contact by the operator.

Z is a worm secured to shaft *z* to impart motion to gear Y, said motion being imparted by means of the pulley 1, which is driven by pulley 2 upon the side of cam H, a belt, 3, connecting the two pulleys.

4 is a pulley over which is passed a strap, 5, which is secured at one end to the lower end of the guide-bar V, and the other end to a weight, 6.

7 is an adjustable rod, the end of which strikes the spring *v* to unlock the feed-nuts from the feed-screw when the swaging operation is completed, the jaws U U' being opened by force of the spiral spring 8, which is inserted between them.

In putting this machine in practical operation motion is imparted to the pulley I in the direction indicated by the arrows, which causes the shaft F and cams H H' to revolve in the same direction, and as each cam has four projecting points placed alternately a rapid oscillating motion is imparted to the vertical lever M by said cams, which motion is communicated to the double horizontal lever L through the rock-shaft J. The oscillating motion is then imparted to the single horizontal levers *d d'* by means of the connections *f f'*, and as one end of these levers is pivoted to a fixed center it is evident that a rapid reciprocating motion will be imparted to the swaging-dies in consequence of the arcs of circles described by the ends of the levers which are in contact with said dies, the latter being closed when both levers are in line with the same, as shown in full lines, Fig. 1, and separated most at extreme points of oscillation, as shown in broken lines, same figure. The dies are retained in contact with the rolls at the ends of said levers by force of the U-shaped spring *c* between them, and as the dies are forced together at each oscillation of the levers in either direction eight compressions are produced upon the wire blank during each revolution of the driving-wheel.

The feeding mechanism is put in operation by first inserting the end of a wire blank of the required length between the jaws of the griping-chuck with nut T unloosed, and as the spindle is now thrown back to its extreme point, as shown in Fig. 2, by power of weight 6, said spindle is prevented from turning while screwing up the nut tightly upon the tapering end of the jaws in consequence of the point of the device *x* being between the teeth of the collar X, and the chuck is prevented from turning by means of the pin *o*, which passes through the shank. The spindle is now pushed forward until the free end of the wire blank comes in contact with the swaging-dies by the operator placing the palm of his hand against the knob W at the top of the guide-bar V, and when the blank is in this position the jaws U U' are closed by the fingers of the same hand. The sleeve *s* and all the devices secured to the same are now moved forward at a uniform rate of speed by means of the revolving feed-screw *u*, while the spindle revolves in the direction indicated by the arrow by means of the gear-wheels Y *y*; but the spindle pauses in its forward movement and the chuck ceases to revolve during the instant of the compression of the dies upon the wire blank in consequence of the yielding of springs *t* and *q q'*; but said spindle and chuck recover their original position, while the dies are separated by force of the same springs. The blank is thus moved forward and operated upon by the swaging-dies until the spring-catch V comes in contact with the end of the rod 7, as shown in Fig. 3, which causes said spring to bend sufficiently to remove the shoulder on the same from the end of one of the jaws, as shown in Fig. 5, allowing the jaws to open by force of the spring 8, as shown in Fig. 9, when the swaged blank is instantly removed from the swaging-dies, and the spin-

dle and mechanism connected therewith are thrown back to their original position by power of weight 6. The nut T is now unscrewed sufficiently to release the blank from the gripe of the jaws of the chuck, and the spindle is prevented from turning by the point of the device *x* being between the teeth of the collar X; but the chuck is prevented from turning enough to crush the small spiral springs *q q* by means of the pins *r r'* in the end of the spindle and the oblong slots in the collar of the same, as shown in Fig. 13; but said slots are made sufficiently long to allow the required yielding of the springs during the swaging operation upon the wire blank.

Thus it will be seen that I have produced a machine for swaging sewing-machine-needle blanks and similar articles which is very quiet, rapid, and effective in its operation, and as satisfactory in its results as can be desired; therefore

I claim as a new and improved arrangement of devices and movements—

1. The combination of the swaging-dies *a a'*, spring *c*, friction-rolls *g g'*, and oscillating levers *d d'*, as shown and described, for the object set forth.

2. The combination of the oscillating levers *d d'*, connections *f f'*, double oscillating lever L, rock-shaft J, lever M, cams H H', and driving-shaft F, arranged substantially as shown and described, for the object set forth.

3. The combination of spindle Q, griping-chuck R, constructed with shank *m* and collar *l*, having the oblong slots, stop-pin *o*, springs *q q'*, and pins *r r'* inserted into the end of said spindle, and cap S, all constructed and arranged substantially as shown and described, for the object set forth.

4. The combination of the spindle Q, sleeve *s*, spring *t*, clamp-jaws U U', having half-nuts on lower ends of each, spring-catch *v*, adjustable bar 7, and feed-screw *u*, all constructed and arranged substantially as shown and described, for the object set forth.

5. In combination with the spindle Q and sleeve *s*, the guide-bar V, retained in its vertical position by means of the rods *w w'*, and having the knob W at the top of the same in such a position with respect to the handles of the jaws U U' as to enable the operator to push said guide-bar and spindle forward by placing the palm of his hand against said knob, and with the fingers of the same hand to close the jaws of the clamp upon the feed-screw, as described, and for the object set forth.

6. In combination with the spindle Q, the toothed collar X, rigidly secured to said spindle, and the device *x*, secured to the top of bearing J or other stationary portion of the feed-frame, and having a wedge-shaped point to enter between the teeth of the collar when said spindle is thrown back to its extreme point, as shown, so as to prevent the turning of said spindle while screwing up or unscrewing the nut T on the griping-chuck, as described, and for the object set forth.

7. The combination of the spindle Q, gears *y* and Y, having teeth pointed upon inner and outer ends, respectively, as shown, so that said gears may be readily brought in working contact with each other when the spindle is pushed forward by the operator, for the object set forth.

ROSEWELL THOMPSON.

Witnesses:
JAMES GILBERT,
GEORGE B. WOOTTON.