A. BOWERS.

Adjustable Vehicle-Top.

No. 208,564. **Patented Oct. 1, 1878.**

Fig. 1.

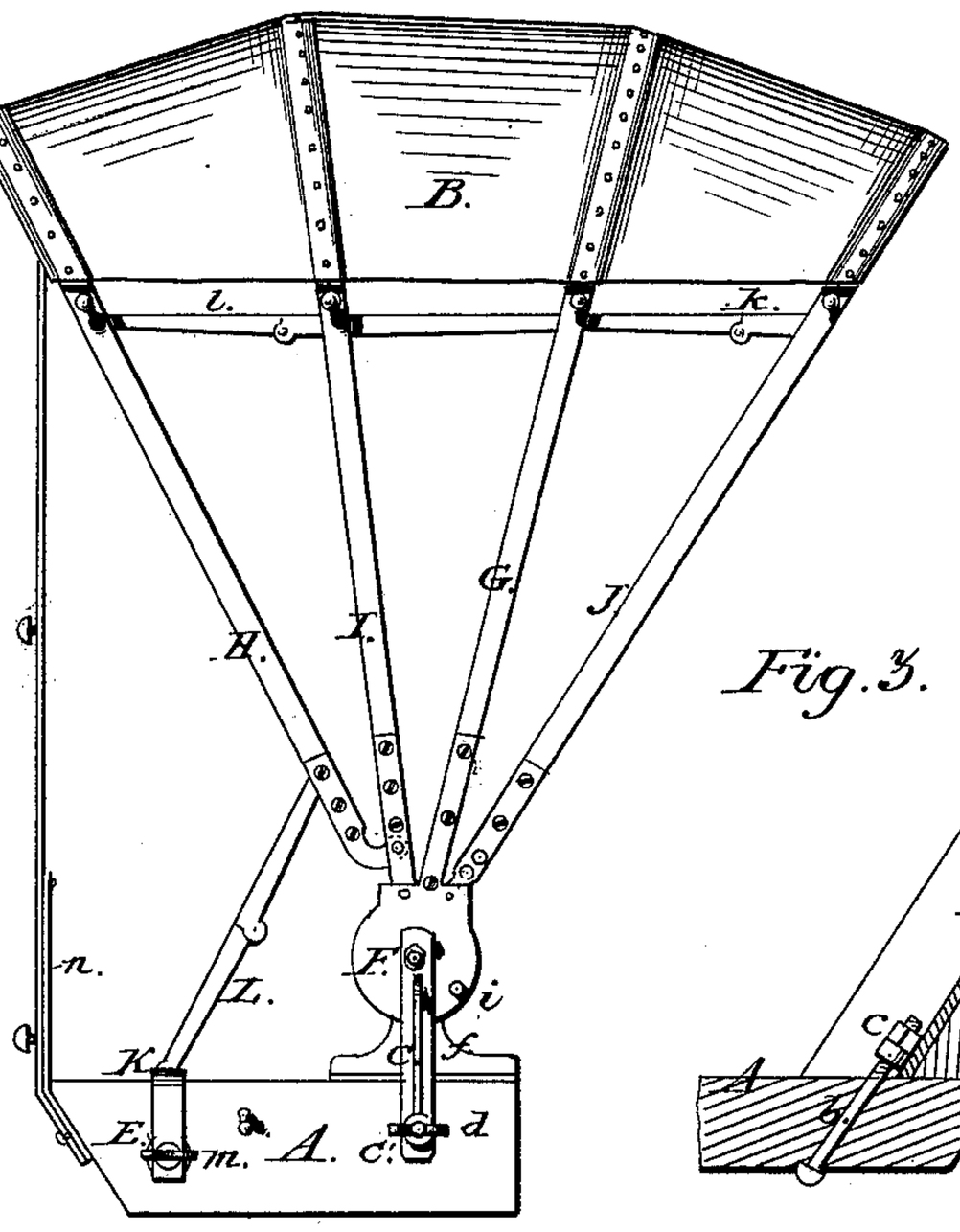

Fig. 2.

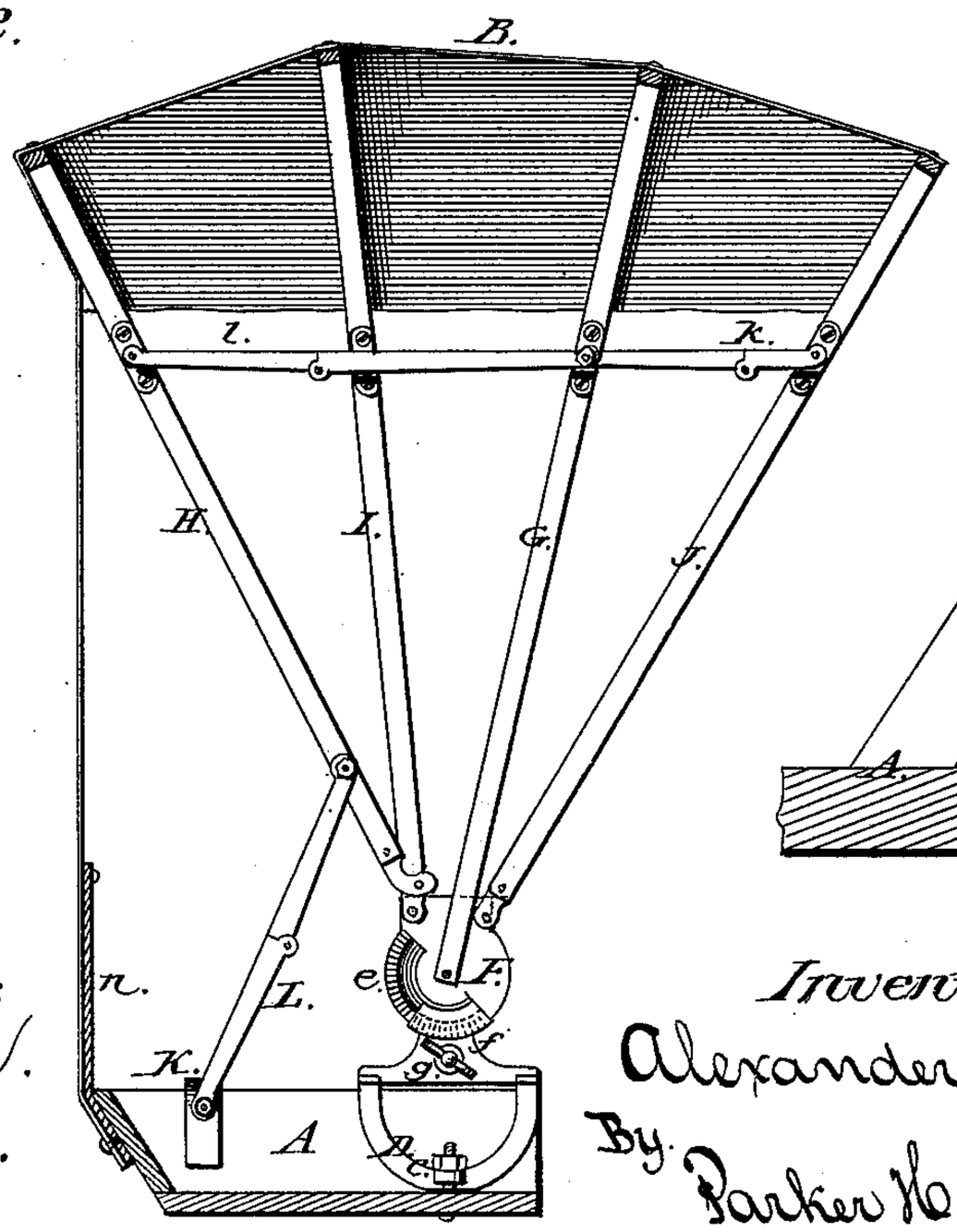

Fig. 3.

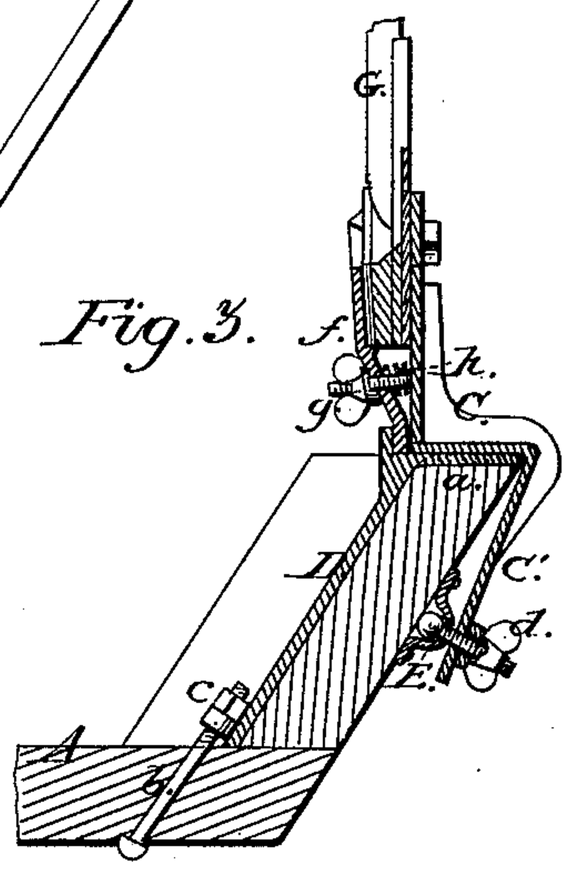

Fig. 4.

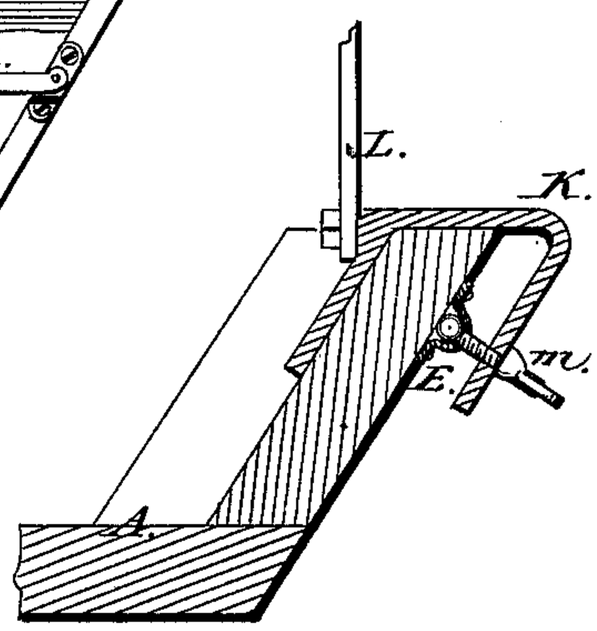

Witnesses:
Edw. W. Donn.
Geo. Carlton.

Inventor:
Alexander Bowers,
By Parker H. Sweet Jr. & Co
Att'ys.

N. PETERS, PHOTO-LITHOGRAPHER, WASHINGTON, D. C.

UNITED STATES PATENT OFFICE.

ALEXANDER BOWERS, OF DUBUQUE, IOWA.

IMPROVEMENT IN ADJUSTABLE VEHICLE-TOPS.

Specification forming part of Letters Patent No. **208,564**, dated October 1, 1878; application filed May 9, 1878.

To all whom it may concern:

Be it known that I, ALEXANDER BOWERS, of Dubuque, in the county of Dubuque and State of Iowa, have invented certain new and useful Improvements in Adjustable Seat-Awnings or Buggy-Tops; and I do hereby declare that the following is a full, clear, and exact description thereof, which will enable others skilled in the art to which it pertains to make and use the same, reference being had to the accompanying drawings, and to the letters of reference marked thereon, which form a part of this specification, and in which—

Figure 1 represents a perspective view of my invention; Fig. 2, a vertical section thereof; and Figs. 3 and 4, detail views.

Similar letters of reference occurring on the several figures indicate corresponding parts.

My invention relates to improvements in adjustable seat-awnings or buggy-tops; and it consists of an improved means for attaching and holding the awning or top to the seat of the vehicle, as also for setting said awning or top to any desired angle.

It further consists in the attachment of auxiliary joint-braces to the frames or standards, all as will be hereinafter more fully described, and pointed out in the claims.

Referring to the drawings, A represents the seat of the vehicle, to the sides of which the awning or top B is secured. C represents a vertical metallic arm or standard, attached to the upper part; *a*, of the semicircular flanged plate D, which rests upon the inner part and top edges of the sides of the vehicle-seat A, said plate being secured in place upon the seat by means of a bolt, *b*, passing through the seat and through a lug or projection on the bottom of the plate, where it is provided with a nut, *c*, as shown. The vertical arm C, which stands at right angles from the part *a* of the plate D, has a downwardly-projecting arm, C′, which may stand at any angle less than a right angle to the seat, and which is provided on the lower end with a thumb-screw, *d*, which works in a swivel-plate, E, and which, being screwed inwardly, clamps the said swivel-plate against the side of the seat, to firmly hold and secure the plate D and arm C, in connection with the bolt *b*, upon the seat A. To the upper part of the arm or standard C is pivoted a circular plate, F, provided with a toothed segment, *e*, which is adapted for operation in connection with the segmental hinge *f*, which is clamped to the lower part of the arm C by a thumb-screw, *g*, to hold the top or awning at any desired angle, a spiral or other suitable spring, *h*, being arranged between the said hinge *f* and arm C, to readily release the clutch of the hinge upon the segment *e* when the thumb-screw is rotated outwardly. The plate F is also provided on its outer surface with a stop or projecting pin, *i*, which strikes against the standard C, to prevent the top or awning from going too far forward.

To the upper central part of the plate F is rigidly attached the lower ends of the main frame or bow G, while the lower ends of the front and rear frames or bows, H I J, are hinged or pivoted to the plate, as shown. The front bow, J, is provided on each side of the vehicle with a joint-brace, *k*, pivoted to the front and main bow, G, so as to enable the front bow to be folded back, to allow more space for easy ingress and egress to and from the vehicle. A joint-brace, *l*, is also provided on the same line as that of the brace *k*, being pivoted to and connecting the rear bow, H, and main bow G, to permit of the bows folding up close when the top is let down, and holding the bows open when the top is raised.

To the rear of the sides of the seat A is fitted an overlapping clamp, K, which is adjusted and held in place by means of the thumb-screw *m*, working in the swivel-plate E, which presses against the side of the seat. A joint-brace, L, is pivoted to this clamp K and to the lower part of the rear bow, H, to assist in holding the top or awning in place upon the seat, as well as to strengthen said top when in a raised position.

The curtains may be secured to the frames or bows by means of ordinary fastenings.

It will be observed that by means of my improvements I am enabled to produce a buggy top or awning capable of being adjusted and held at suitable angles, and combining strength and durability with a ready adaptation to the purpose contemplated.

Having thus described my invention, what I claim as new and useful is—

1. The top or awning B, consisting of the

frames G H I J, attached to the circular plate F, having segment *e*, and pivoted to standard C, attached to the flanged plate D, in combination with the seat A, the several parts being constructed, arranged, and combined to operate substantially as and for the purpose specified.

2. The flanged circular plate D, having arm or standard C, downwardly-projecting arm C′, provided with thumb-screw *d* and swivel-plate E, hinged segment *f*, spring *h*, and thumb-screw *g*, in combination with the circular plate F, carrying the frames or bows, and provided with segment *e* and stop-pin *i*, substantially as and for the purpose specified.

3. The frames or bows H, I, J, and G, attached to the circular plate F, and provided with joint-braces *k*, *l*, and L, the latter being pivoted at the lower end to clamp K, having thumb-screw *m* and swivel-plate E, in combination with the seat A, substantially as and for the purpose specified.

4. The clamp K, provided with thumb-screw *m* and swivel-plate E, and having joint-brace L, in combination with the frame H of the top B, substantially as and for the purpose specified.

In testimony that I claim the foregoing as my own invention I affix my signature in presence of two witnesses.

ALEXANDER BOWERS.

Witnesses:

D. E. LYON,

W. C. WOOD.