R. O. KEEFFE.
Hoisting-Jack.

No. 207,661. Patented Sept. 3, 1878.

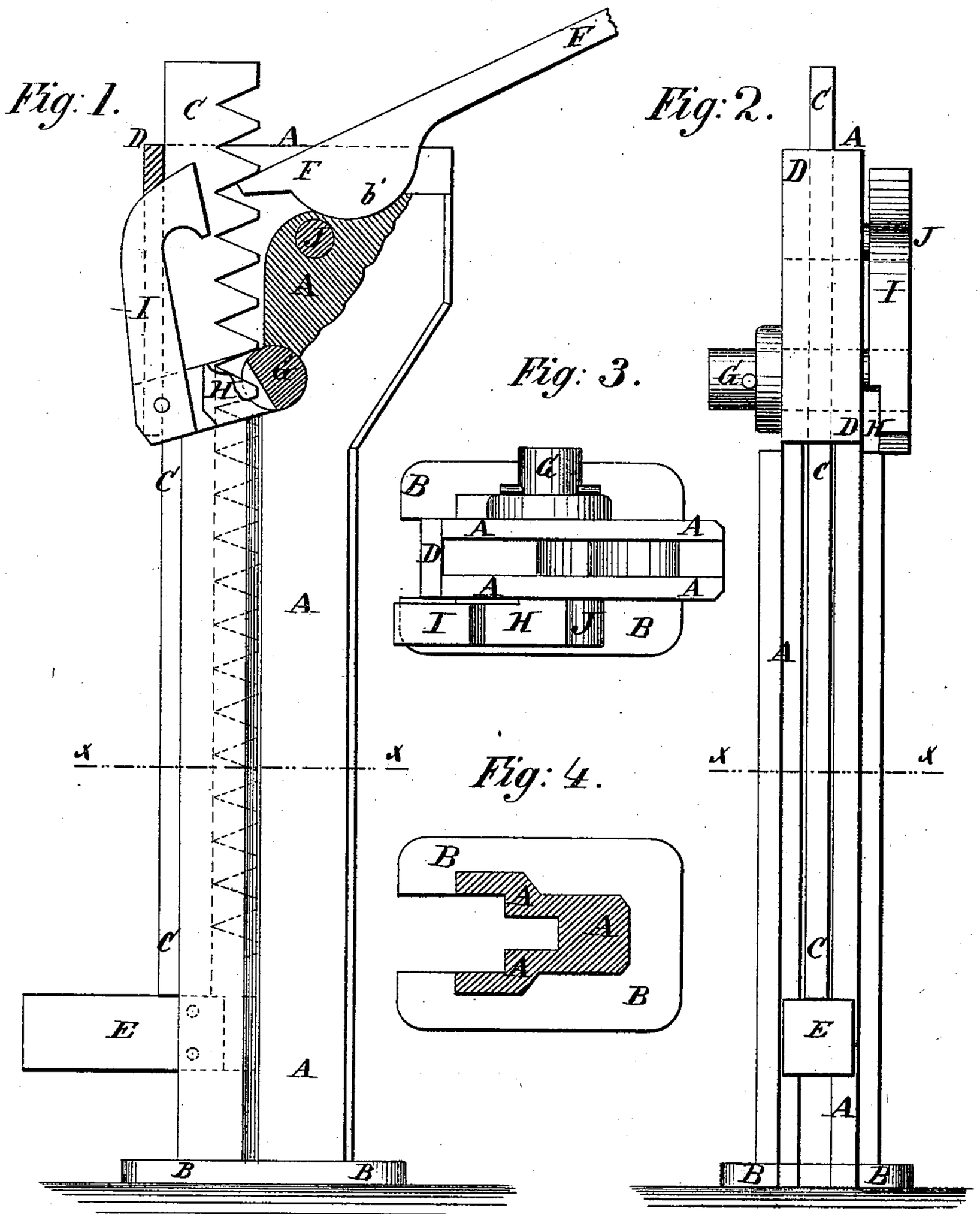

WITNESSES:

Achilles Schehl.
C. Sedgwick

R. O. Keeffe
BY Munn & Co
ATTORNEYS.

N. PETERS, PHOTO-LITHOGRAPHER, WASHINGTON, D. C.

UNITED STATES PATENT OFFICE.

RICHARD O. KEEFFE, OF OMAHA, NEBRASKA.

IMPROVEMENT IN HOISTING-JACKS.

Specification forming part of Letters Patent No. **207,661**, dated September 3, 1878; application filed July 1, 1878.

To all whom it may concern:

Be it known that I, RICHARD O. KEEFFE, of Omaha, in the county of Douglas and State of Nebraska, have invented a new and Improved Hoisting-Jack, of which the following is a specification:

Figure 1 is a side view of my improved jack, partly in section to show the construction. Fig. 2 is a front view of the same. Fig. 3 is a top view of the same, the lever and the hoisting-bar being removed. Fig. 4 is a horizontal section of the same, taken through the line *x x*, Figs. 1 and 2.

Similar letters of reference indicate corresponding parts.

The object of this invention is to furnish an improved hoisting-jack for raising railroad-tracks, safes, and other heavy bodies that require to be taken hold of close to the ground or floor, and which shall be simple in construction, convenient in use, and effective in operation.

The invention consists in an improved hoisting-jack formed by the combination of the standard having a base attached to its lower end, having a longitudinal groove formed in its forward side, and having the upper part of the said groove closed with a plate, the hoisting-bar having a foot attached to its lower end, and having teeth formed in its inner edge, the lever having a rounded projection formed upon its lower edge, the notched shaft, the arm, the hook, and the pin, as hereinafter fully described.

A represents the standard, to the lower end of which is attached a base, B, of such a size as to give the device a stable support.

In the forward side of the standard A is formed a longitudinal groove to receive the hoisting-bar C, which groove is closed at the upper part of the standard A by a plate, D, to prevent the said hoisting-bar from being pressed out of the said groove when power is applied to it.

To the lower end of the hoisting-bar C is attached an outwardly-projecting foot, E, to be placed beneath the object to be raised.

In the inner edge of the hoisting-bar C are formed teeth or notches to receive the end of the lever F, by means of which power is applied to it.

Upon the lower side of the forward part of the lever F is formed a rounded projection, *b'*, which rests and works in the concave bottom of the notch formed in the upper end of the standard B.

G is a short shaft, which passes through and works in a hole in the standard A, and which is notched upon one side, so that it can engage with the teeth of the bar C, and support it and its load while the end of the lever F is moved down to the next tooth.

To one end of the shaft G is rigidly attached a short arm, H, to the outer end of which is pivoted the end of a hook, I.

The movement of the hook I upon the end of the arm H is limited by a shoulder formed upon it, and which strikes against the edge of the said arm H.

J is a pin attached to the side of the standard A, to receive the hook I and hold the shaft G in such a position that it will not engage with the teeth of the bar C, and will thus allow the said bar C to be raised and lowered freely.

The weight of the arm H and hook I, when disconnected from the pin J, holds the shaft G in such a position that it will engage with the teeth of the hoisting-bar G automatically, and support the said bar while the lever F is being moved to a lower tooth.

The shaft G is secured in place detachably by a pin passed through its forward end, as shown in Figs. 2 and 3.

Having thus fully described my invention, I claim as new and desire to secure by Letters Patent—

An improved hoisting-jack formed by the combination of the standard A, having a base, B, attached to its lower end, having a longitudinal groove formed in its forward side, and having the upper part of the said groove covered with a plate, D, the hoisting-bar C, having a foot, E, attached to its lower end, and having teeth formed in its inner edge, the lever F, having a rounded projection formed upon its lower edge, the notched shaft G, the arm H, the hook I, and the pin J, substantially as herein shown and described.

RICHARD O. KEEFFE.

Witnesses:
THOMAS REILLY,
THOS. CALLAN.