N. H. BROWN.

Roof-Battening.

No. 202,784. Patented April 23, 1878.

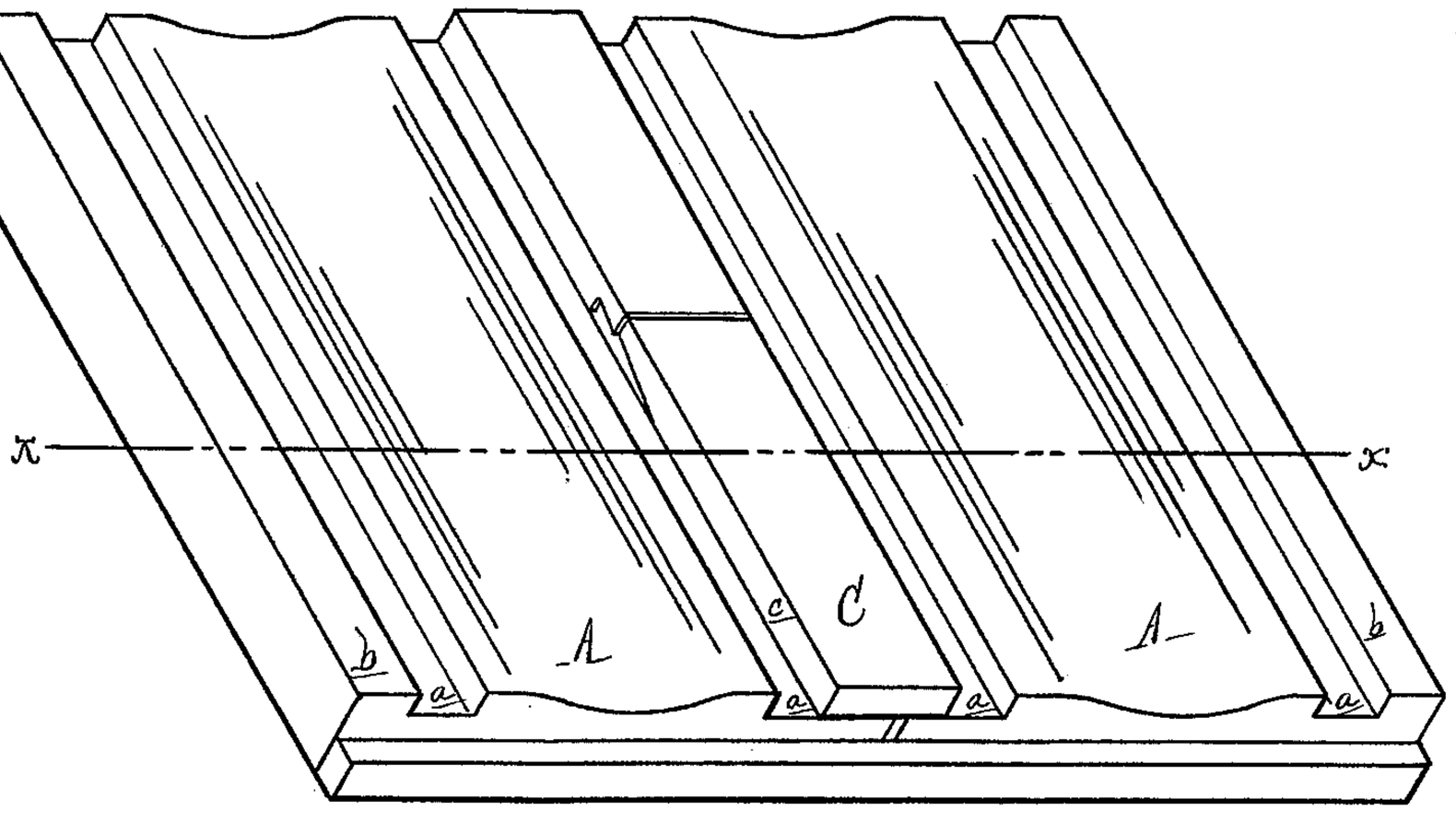

Fig. 1.

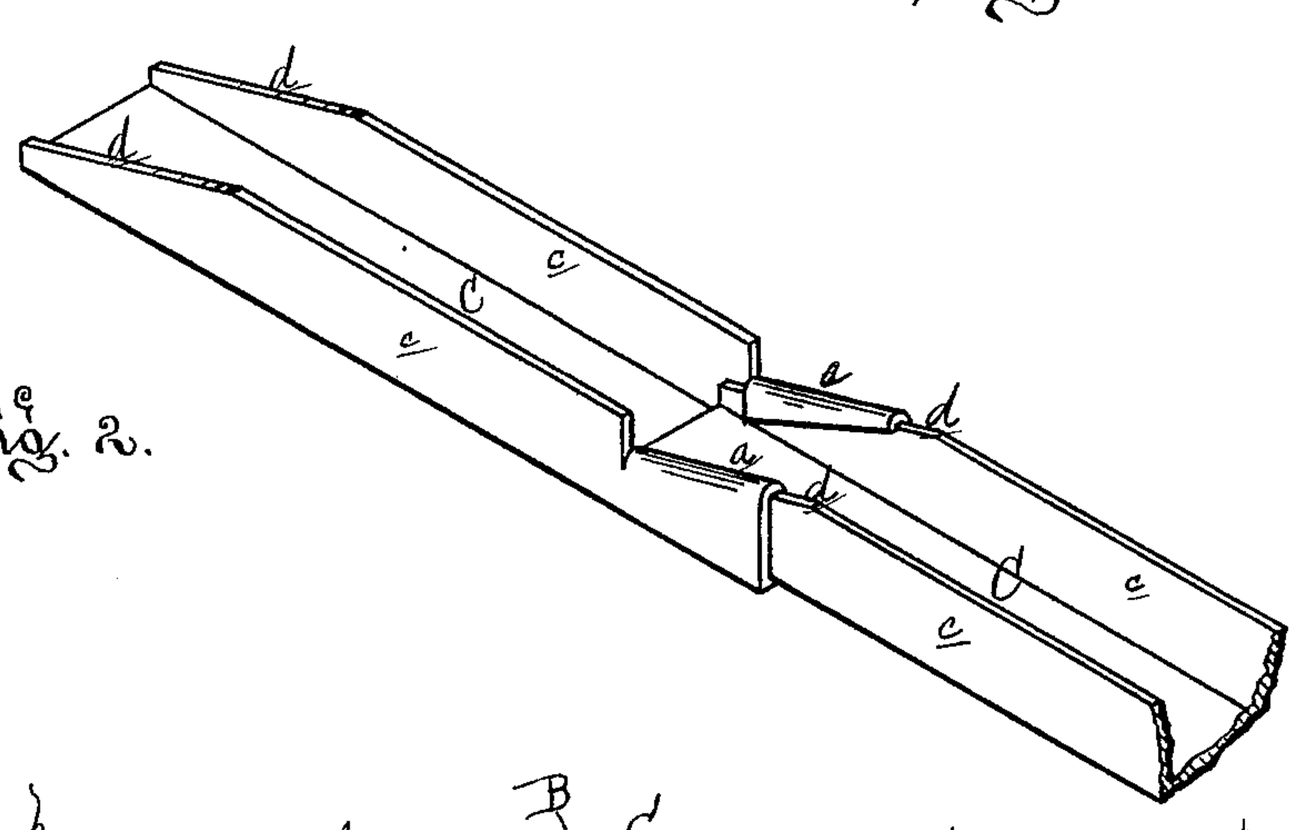

Fig. 2.

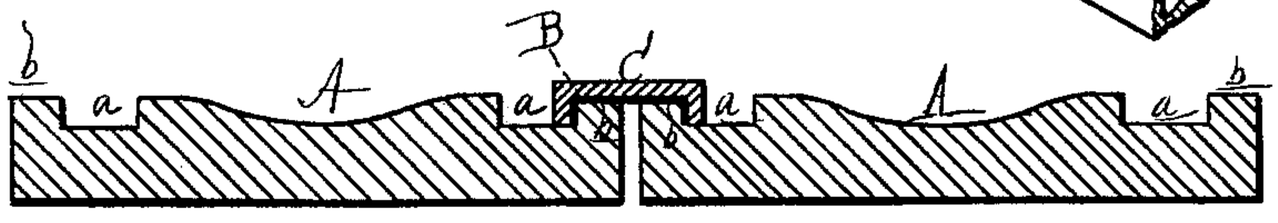

Fig. 3.

Attest:
H. L. Aulls
Charles J. Kent

Inventor:
N. H. Brown
By Atty
Phil. S. Sprague

N. PETERS, PHOTO-LITHOGRAPHER, WASHINGTON, D. C.

UNITED STATES PATENT OFFICE.

NATHAN H. BROWN, OF DETROIT, MICHIGAN.

IMPROVEMENT IN ROOF-BATTENING.

Specification forming part of Letters Patent No. **202,784**, dated April 23, 1878; application filed March 7, 1878.

To all whom it may concern:

Be it known that I, NATHAN H. BROWN, of Detroit, in the county of Wayne and State of Michigan, have invented an Improvement in Roofs, of which the following is a specification:

The nature of this invention relates to an improvement in the construction of a combined wood and metal roof; and the invention consists of the peculiar form given to the roofing-boards and the metallic batten-strips which cover the joints between the roofing-boards, and in the peculiar construction of the device formed on the ends of the batten-strips for securing them together, all as more fully hereinafter set forth.

Figure 1 is a perspective view of a section of roof constructed after my invention. Fig. 2 is a perspective view of a section of the metallic batten-strip from the bottom. Fig. 3 is a cross-section at *x x* in Fig. 1.

In the drawing, A represents two adjoining roofing boards or shingles, having cut in their adjacent sides the grooves *a*, leaving on their two sides the shoulders *b*. B represents a strip of tarred paper or roofing-felt, which is placed over the adjoining shoulders *b*. C is a metallic batten-strip, turned down on each side, forming the flanges *c*. These strips are placed over the shoulders *b* of the adjoining roofing-boards, completely covering the joint between them.

This batten-strip C is made in sections, one end of each having its flanges beveled, as shown at *d*, while the other ends have a portion of their flanges cut and turned down, forming bevel-locks *e*, which receive the bevel ends of a succeeding section.

After the roofing-boards are in position the first section of the metallic strip is placed over the adjoining edges of two boards, as shown, and the end is turned down, and the flanges are driven into the ends of the boards, thus securing that end of the strip, while a nail driven through the strip near the other end secures that. The next section is now slipped over the bevel end of the one already in place, concealing the nail at that end, and the upper end of this section is also nailed. Each succeeding section is so laid until the peak of the roof is reached; and after the whole roof is covered the ridge-boards are applied in the usual manner.

What I claim as my invention is—

1. In a roof, the metallic batten-strip C, made in sections, arranged end to end, the wedge-formed sides *d* of the end of one section being interlocked with the upturned sides of the end of the next section, substantially as described and shown.

2. The combination, with the roofing-boards A, having shoulders *b*, of the batten-strip C, made in sections, adapted to lock together in the manner substantially as set forth.

NATHAN H. BROWN.

Witnesses:

CHAS. J. HUNT,

H. S. SPRAGUE.