P. E. SLOAN.

TINTED WINDOW-LIGHTS.

No. 192,843. Patented July 10, 1877.

Fig 1

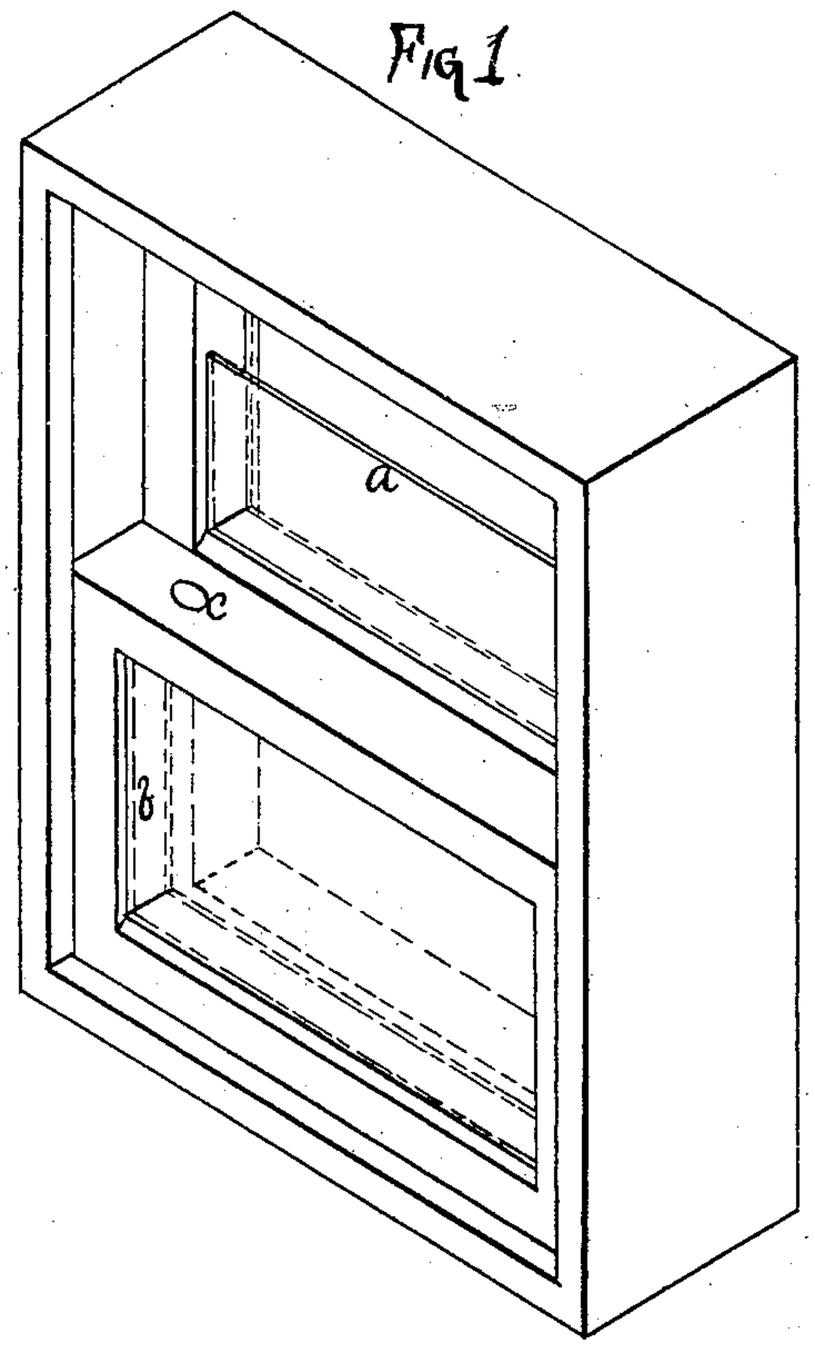

Fig 2.

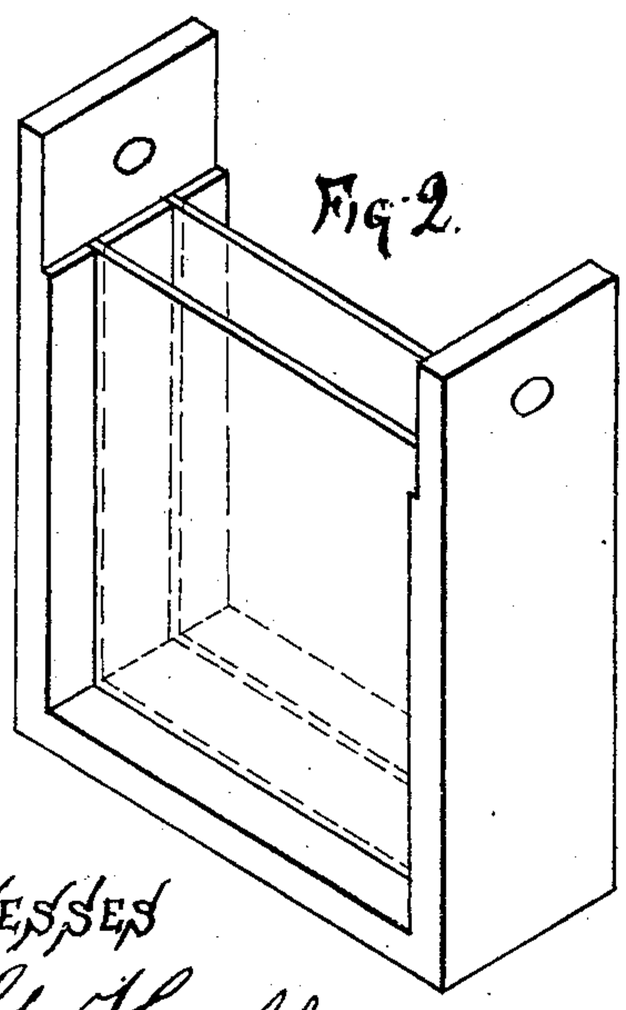

Fig 3

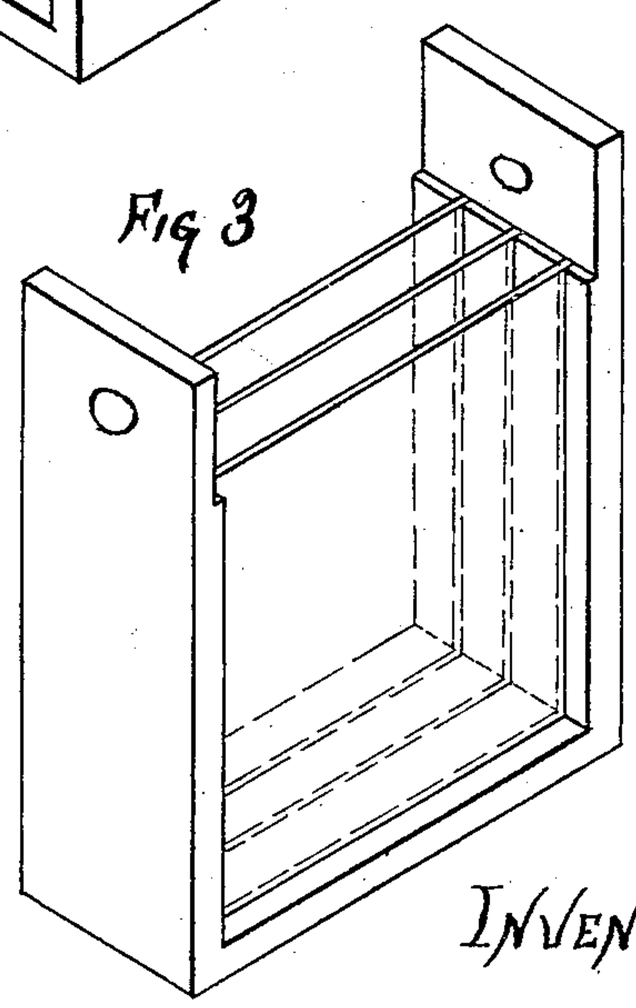

WITNESSES

E. G. Hall

J. F. Greenough

INVENTOR

P. Emendorf Sloan

N. PETERS, PHOTO-LITHOGRAPHER, WASHINGTON, D. C.

UNITED STATES PATENT OFFICE.

P. ELMENDORF SLOAN, OF SYRACUSE, NEW YORK.

IMPROVEMENT IN TINTED WINDOW-LIGHTS.

Specification forming part of Letters Patent No. **192,843**, dated July 10, 1877; application filed April 3, 1877.

To all whom it may concern:

Be it known that I, P. ELMENDORF SLOAN, of Syracuse, New York, have invented an Improved Method of Tinting Window and other Lights, of which the following is a specification:

Recent observation has indicated highly beneficial sanitary and developing effects from the employment of blue glass in windows, screens, and the like; but owing to the high price of this article its use is greatly retarded, and its beneficial effects thereby curtailed.

My device is a cheap and ready substitute therefor, with the added advantage and improvement that the exact depth and amount of color can be readily made to suit the purpose intended without changing the glass.

My improvement consists in fixing properly in one frame, with any suitable water-tight joint, two or more panes of transparent colorless glass, such as any of the glass ordinarily used in windows, said panes being set parallel, and a half inch, more or less, apart, or at an angle with each other, to give direction to the rays of light. In many window-sashes it will merely require a second pane of glass to be thus affixed inside the usual glazing. The space must be water-tight between the two glasses, except at the top, where there must be an opening to insert a colored liquid, that can be made a lighter or deeper tint at will.

In the drawing, Figure 1, the upper sash shows an inner pane of glass, *a*, that does not extend up to the top, so as to leave a space, as clearly shown in the figure. In the lower sash, same figure, the inner glass *b* extends up to the top rail of the sash, through which a hole, *c*, is made to fill the space between the two glasses with tinted liquid. Fig. 2 shows a portable frame for a screen. Fig. 3 represents a similar frame with three glasses, in one of the spaces between which clear water can be used, and made an aquarium, or otherwise, at will, and this space may be extended to any desired width between the panes for the purpose intended.

It is obvious to any practical chemist that by this arrangement not only can the blue tinted effect be produced, and to any degree required, but other tints for varied chemical or ornamental effects or combinations of color can be readily made, without changing the glass or glasses, by simply drawing off one color and substituting another.

Having thus fully described my improved tinted window or screen, what I claim is—

A tinted window light or screen formed of two or more panes of glass parallel or at an angle one with the other, and fixed in a frame by a water-tight joint, with a space between them for the reception of a tinted liquid, and having an opening into said space for filling and removing the tinted liquid, substantially as and for the purposes specified.

P. ELMENDORF SLOAN.

Witnesses:

A. H. SCHWARZ,

J. C. CHASE