P. P. PARKHURST.

ORE-SEPARATOR.

No. 176,045. Patented April 11, 1876.

Fig. 1.

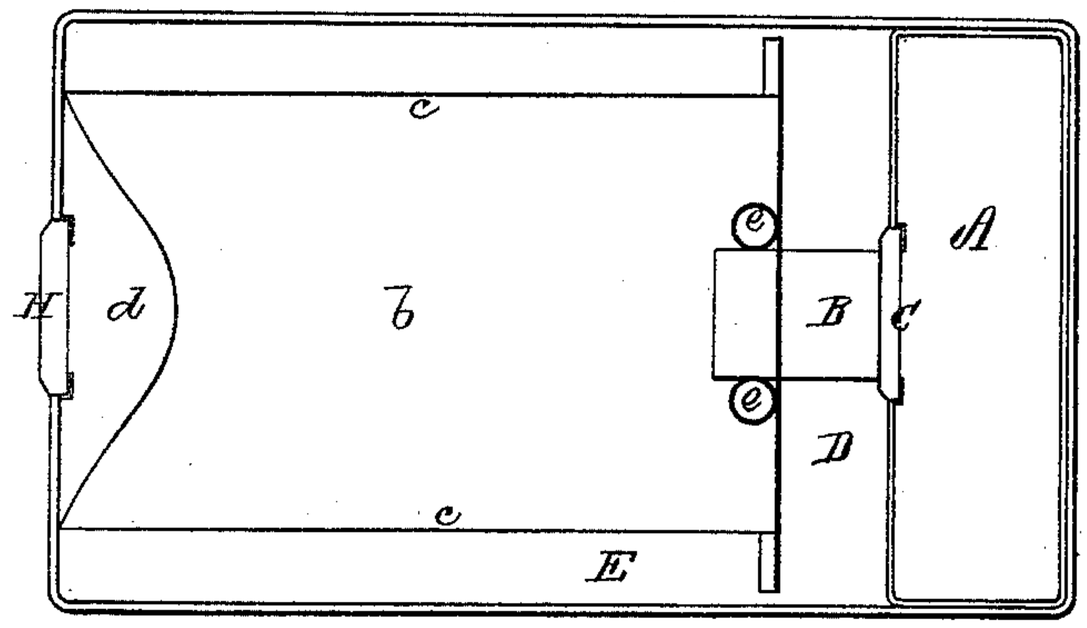

Fig. 2.

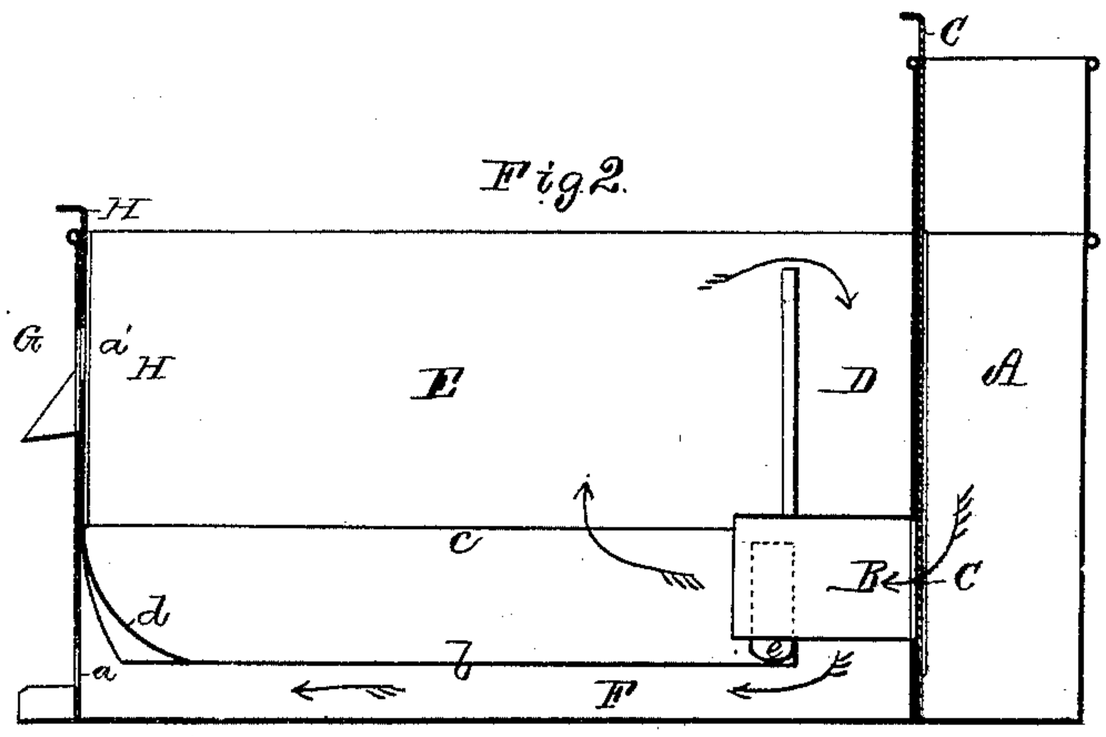

Fig. 3.

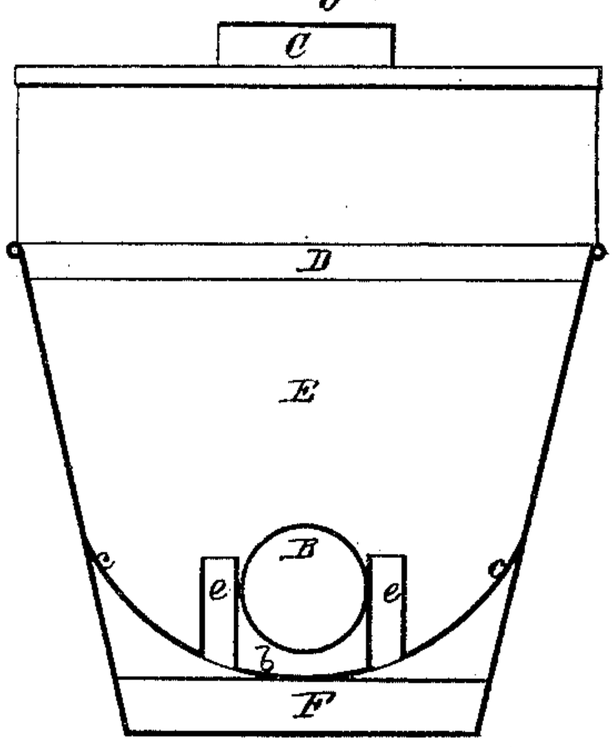

Fig. 4.

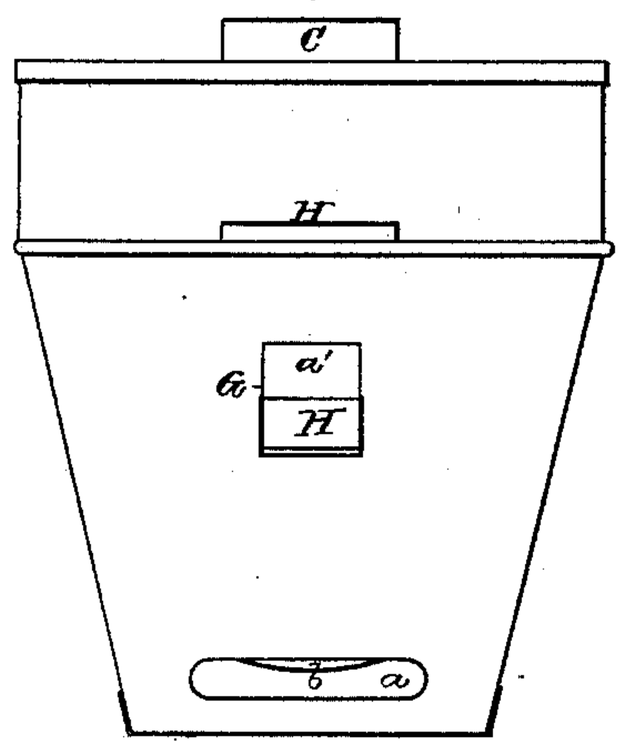

Witnesses.

S. N. Piper.

L. W. Miller.

Parmenas P. Parkhurst.

by his attorney.

R. H. Eddy

N. PETERS, PHOTO-LITHOGRAPHER, WASHINGTON, D. C.

UNITED STATES PATENT OFFICE.

PARMENAS P. PARKHURST, OF MILFORD, MASSACHUSETTS

IMPROVEMENT IN ORE-SEPARATORS.

Specification forming part of Letters Patent No. **176,045**, dated April 11, 1876; application filed February 21, 1876.

To all whom it may concern:

Be it known that I, PARMENAS P. PARKHURST, of Milford, of the county of Worcester and State of Massachusetts, have invented Improved Ore-Separator; and do hereby declare the same to be fully described in the following specification, and represented in the accompanying drawings, of which—

Figure 1 is a top view, Fig. 2 a longitudinal section, Fig. 3 a transverse section, and Fig. 4 a front end view, of it.

In some respects my present ore-separator is like that for which a patent was granted to me on November 22, 1859, though it differs therefrom in other and important particulars.

My invention consists in the combination of a head-reservoir, its educt, a washing-chamber and overflow-chamber, and a discharge-chamber, arranged as set forth.

In the drawings, A denotes the head-reservoir, provided at its lower part with an educt or pipe, B, having to its mouth a gate, C. This educt extends through the overflow-chamber D, and opens into the washing-chamber E at one end, and near the bottom thereof. The overflow chamber or passage D is a narrow space arranged between the chambers A and E, and opening at bottom into a long discharge-chamber, F, arranged underneath the washing-chamber. In the front end of the said chamber F is an educt, *a*, arranged a short distance above the bottom of such chamber F. There is also in the front end of the washing-chamber a gateway, G, provided with a gate, H, having in it a discharge-opening, *a'*, of half the depth of the gateway, and arranged so that when the gate is in its lowest position the top of the opening *a'* shall be even with that of the gateway. The gate extends below its opening *a'* a distance greater than the depth of the gateway. By this arrangement water may be discharged either through the upper or lower parts of the gateway, or through the whole gateway, as may be desired. The bottom *b* of the washing-chamber is curved transversely, and its opposite sides *c c* flare or incline outward from each other as they rise upward from the bottom. Furthermore, there is at the front end of the said bottom a curved deflector, *d*, arranged as represented. There are also, at the front end of the chamber, pipes *e e* of discharge, erected on the bottom of said chamber and opening into the discharge-chamber, such pipes extending to the height or about the altitude of the bottom. They are simply overflow-pipes, and are intended to discharge the water from the washing-chamber, they being plugged when the apparatus is in use.

The pulverized ore, or the earth to be washed for the obtaining of a metal, as gold, for instance, is to be put into the washing-chamber, there being in the head-reservoir a head of water. On raising the gate of such reservoir the water will rush through the pipe B into and through the washing-chamber, and, striking against the deflector thereof, will be thrown upward and backward, the surplus passing over the partition *f*, and down into the overflow-chamber, and from thence through and out of the discharge-chamber, whereby the material in the washing-chamber may be thoroughly washed, the finer and lighter particles flowing off with the discharged water. Any metal carried out of the washing-chamber will be intercepted by the discharge-chamber underneath the said washing-chamber.

It is found that by having the bottom and sides of the washing-chamber formed and arranged as represented better results are obtained than with a flat bottom and vertical sides. The ore not only settles to better advantage, but the lighter particles or extraneous matters are better separated and carried off.

One important feature of difference between my present ore-separator and that heretofore patented by me, is that the overflow-chamber has the discharge-pipe of the head-chamber extended through it, and such overflow-chamber opens directly into the discharge-chamber situated beneath the washing-chamber, all of which is productive of advantage. Furthermore, the upper surface of the bottom of the washing-chamber is hollow or curved transversely and provided with a deflector, and there are to the chamber flaring sides, such not appertaining to my previous ore-separator.

I claim, therefore, as my invention, in the ore-separator, as follows:

The combination of the head-reservoir A, washing-chamber E, and their connection-pipe B, as set forth, with the overflow-chamber D, (arranged with them as described,) and with the underflow-chamber F, opening out of the said overflow or discharge chamber D, and arranged beneath the washing-chamber E, all being substantially as specified.

PARMENAS P. PARKHURST.

Witnesses:

R. H. EDDY,

J. R. SNOW.