E. ALE & J. A. SNYDER.

Scroll-Sawing Machines.

No. 157,775. Patented Dec. 15, 1874.

Fig. 1.

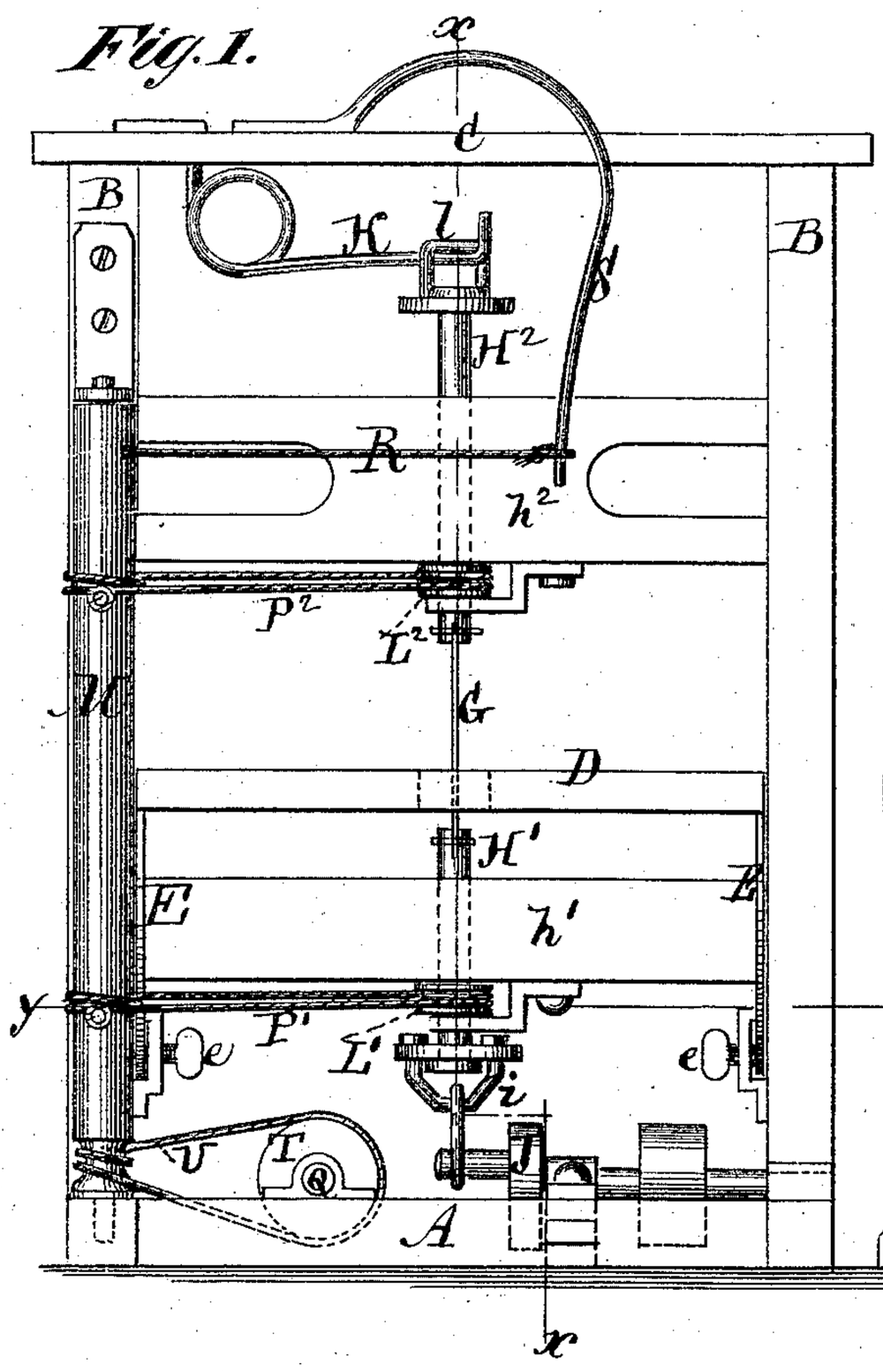

Fig. 2.

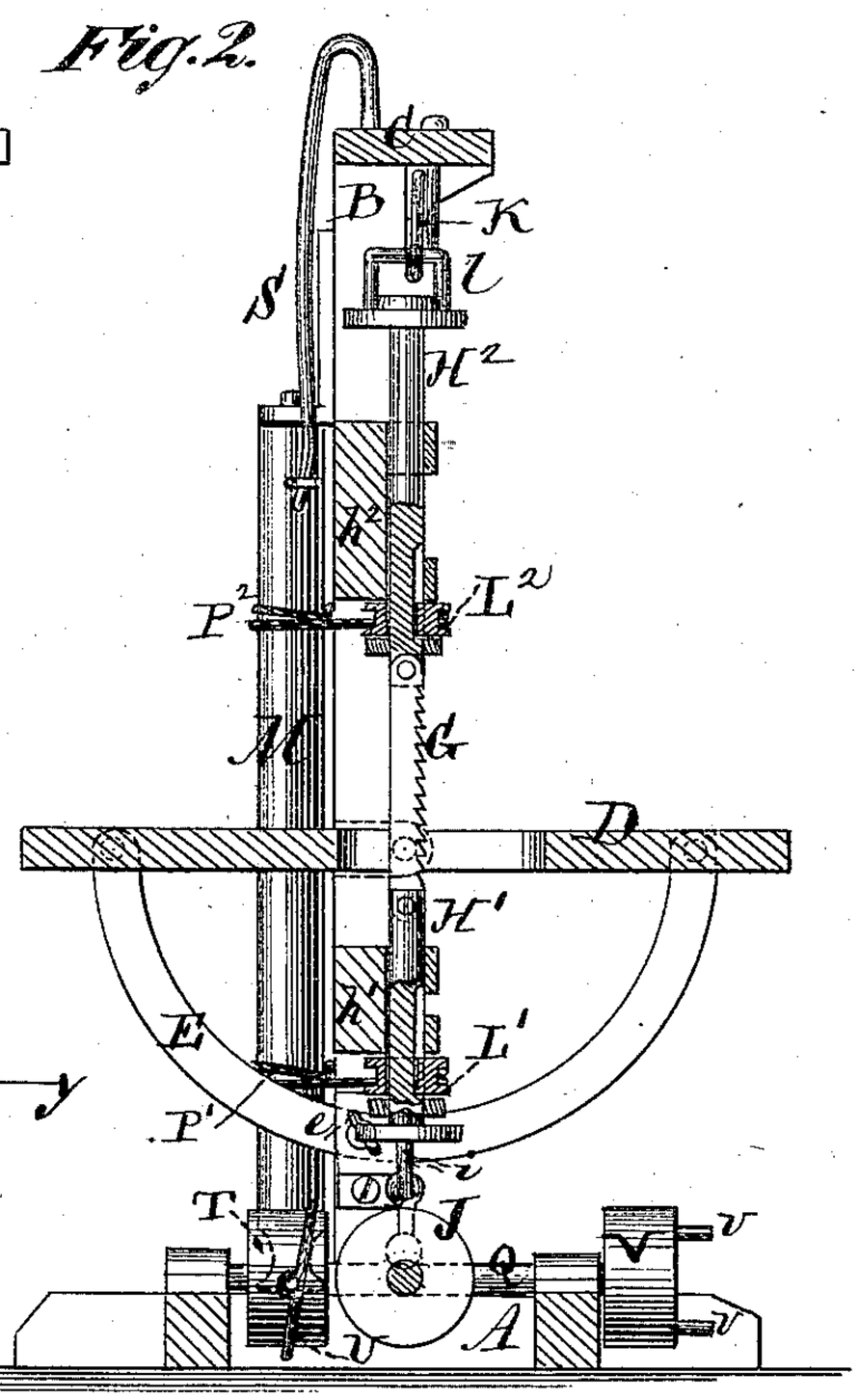

Fig. 3.

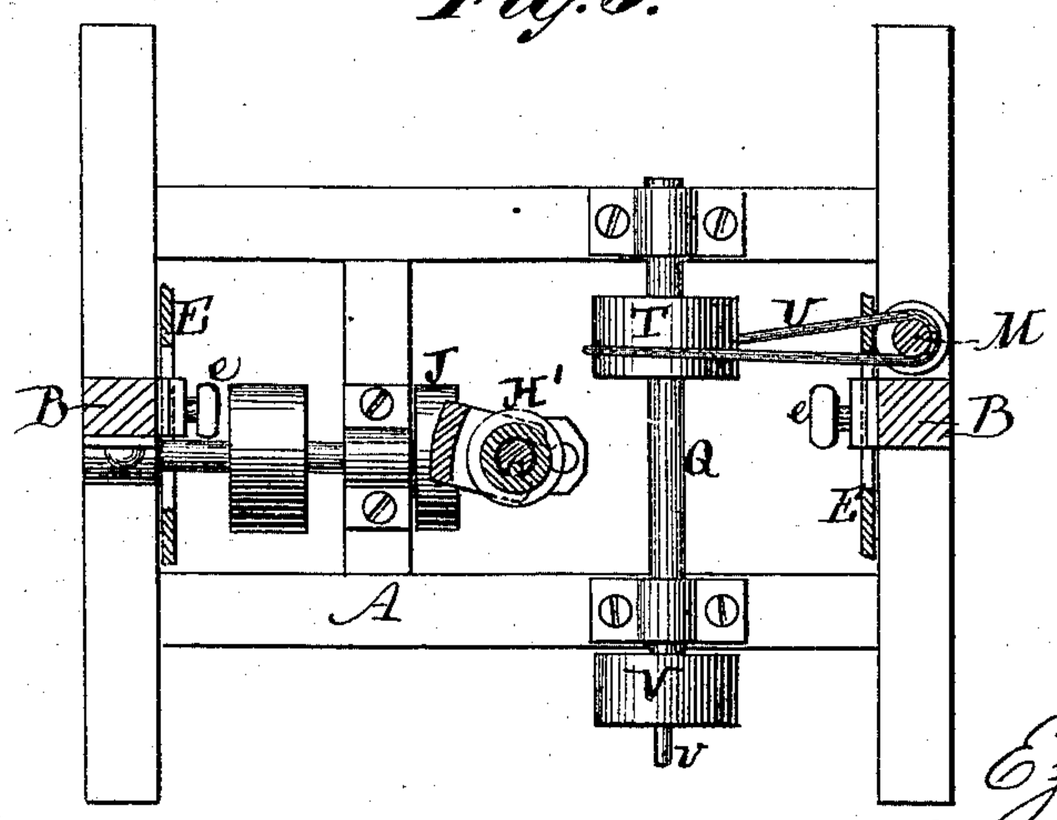

Witnesses.
John Becker
Fred. Haynes

Ezra Ale
John A. Snyder
by their Attorneys
Brown & Allen

THE GRAPHIC CO. PHOTO-LITH 39 & 41 PARK PLACE, N.Y.

UNITED STATES PATENT OFFICE.

EZRA ALE AND JOHN A. SNYDER, OF CLEARFIELD, PENNSYLVANIA.

IMPROVEMENT IN SCROLL-SAWING MACHINES.

Specification forming part of Letters Patent No. **157,775**, dated December 15, 1874; application filed August 22, 1874.

To all whom it may concern:

Be it known that we, EZRA ALE and JOHN A. SNYDER, both of Clearfield, in the county of Clearfield and State of Pennsylvania, have invented certain Improvements in Scroll-Sawing Machines, of which the following is a specification:

The invention consists, first, in means for returning the saw-blade to its normal position when the changing mechanism is released by the foot.

The invention consists, further, in means for connecting the saw-shafts with the driving mechanism, whereby the direction of the saw-blade may be changed without interfering with its reciprocating motion.

In the accompanying drawing, Figure 1 is a rear view of our improved machine. Fig. 2 is a vertical section through the line *x x* of Fig. 1. Fig. 3 is a horizontal section through the line *y y* of Fig. 1.

The working parts of the machine are supported by a frame-work, consisting of a base, A, upright posts B, and cross-bar C. The table D is pivoted between the posts B, and from its under side extend two semicircular bars, E, which work in guides attached to the posts, and provided with set-screws *e*, by which means the table may be inclined at different angles, and held securely at such angles. The ends of the saw G are attached to shafts H^1 H^2, which work in bars h^1 h^2, secured to the posts B. The lower saw-shaft, H^1, is connected, by a swivel-stirrup, *i*, with a crank-wheel, J, on a shaft journaled in the lower part of the frame, whereby the saw receives an upward and downward motion at every revolution of the shaft, which is driven by a belt passing over a pulley on said shaft. The upper saw-shaft, H^2, is connected, by a swivel-stirrup, *l*, with a spring, K, attached to the bar C, which raises the saw as the crank-pin on the wheel J rises during its revolution. On the saw-shafts H^1 H^2 are loose pulleys L^1 L^2, keyed to said shafts, so as to turn therewith, but allow said shafts to move vertically independently of said pulleys. At one side of the frame, near one of the posts B, is journaled a vertical drum, M, or a shaft provided with pulleys, located about in line with the pulleys L^1 L^2. Around the pulleys L^1 L^2 and the drum M pass endless bands, belts, or cords P^1 P^2, which may be wrapped one or more times around the pulleys or the drum, or both, in order to insure their engagement therewith. Near the upper end of the drum or shaft M is attached one end of a cord, R, the other end of which connects with a spring, S, attached to the bar C. In the lower part of the frame, at right angles with the axis of the crank-wheel J, is journaled a shaft, Q, to which is attached a pulley or drum, T, around which, and around a pulley near the lower end of the shaft M, passes an endless band or cord, U. On the front end of the shaft Q is a wheel, V, from which project outward two studs, *v v*.

Instead of the wheel and studs, a bar may be placed at the end of the shaft. The wheel and studs, or the bar used in lieu thereof, serve as a treadle, by means of which the shaft Q may be rotated in either direction.

When the machine is in operation, the spring S, engaging with the cord R, tends to keep the saw-blade in a direction parallel with the sides of the table D. When the operator wishes to deviate from a straight line, instead of shifting the work to one side or the other, he presses with his foot upon one or the other of the studs *v*, rotating the shaft Q in one direction or the other, and thus, through the cord or band U, drum or shaft M, bands P^1 P^2, and pulleys L^1 L^2, the saw-shafts are caused to turn to the right or left, and give a corresponding direction to the saw-blade. By this means the operator is enabled to change the direction of the saw at pleasure, without the necessity of shifting the work, as heretofore. When the treadle is released, the spring S, through the cord R, drum or shaft M, bands, pulleys, and saw-shafts, returns the saw-blade to its original position, parallel with the sides of the table.

By means of the swivel-stirrups *i l*, the direction of the saw may be changed without interfering with its vertical motion.

The advantages of this machine will be found to be very great in a shop where space is limited, inasmuch as it does not require so much space for shifting the work as machines heretofore in use.

What we claim as new, and desire to secure by Letters Patent, is—

1. The combination of the drum or shaft M, band U, drum or pulley T, and treadle V, substantially as and for the purpose shown and described.

2. The combination of the spring S, cord R, and drum or shaft M with the bands, pulleys, and saw-shafts, substantially as and for the purpose shown and described.

3. The combination of the crank-wheel J, spring K, and the swivel-stirrups *i* and *l* with the saw G and saw-shafts H^1 H^2, arranged and operating as herein shown and described.

EZRA ALE.
JOHN A. SNYDER.

Witnesses:

S. C. BLOOM,
THEODORE STEVENSON.