Jacob Skeen's Imp'd Wagon

PATENTED JUL 11 1871

117004

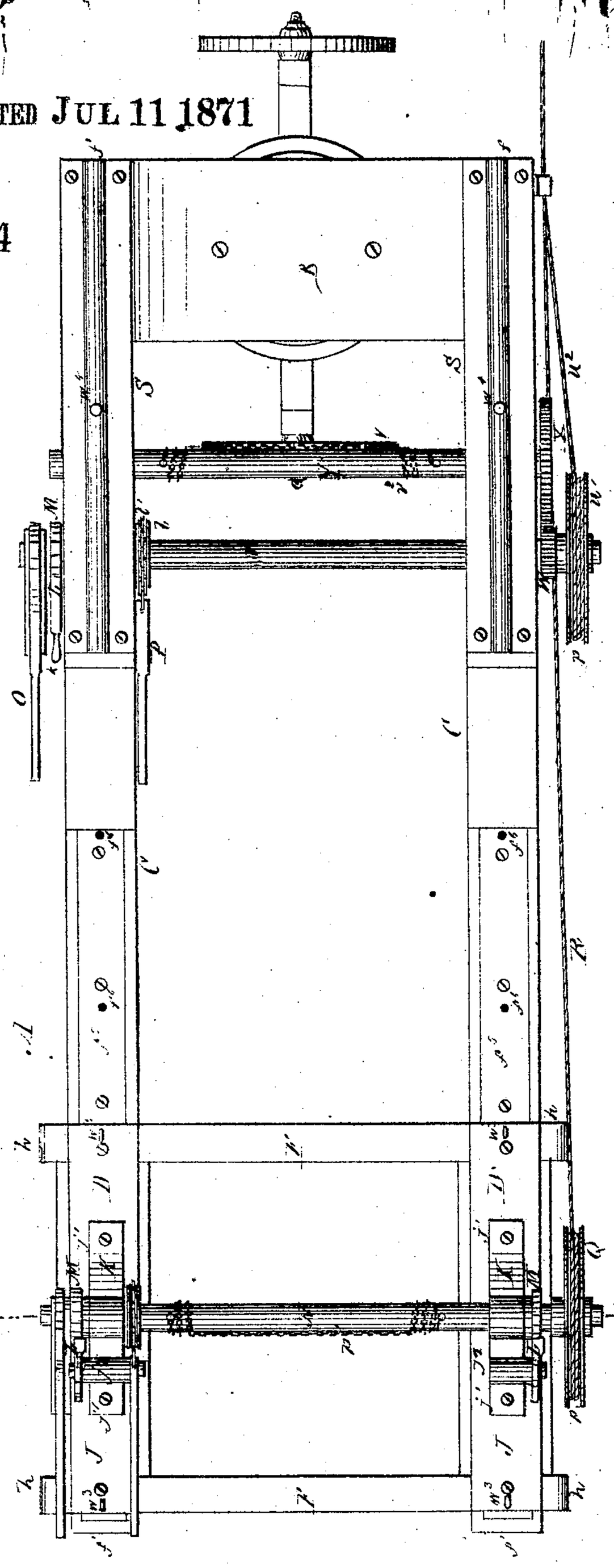

Fig. 1.

Witnesses.
R. S. Allen
John R. Young

Inventor:
Jacob Skeen.
by Prindle & Dyer.
Attys.

Jacob Skeen's Imp'd Wagon.

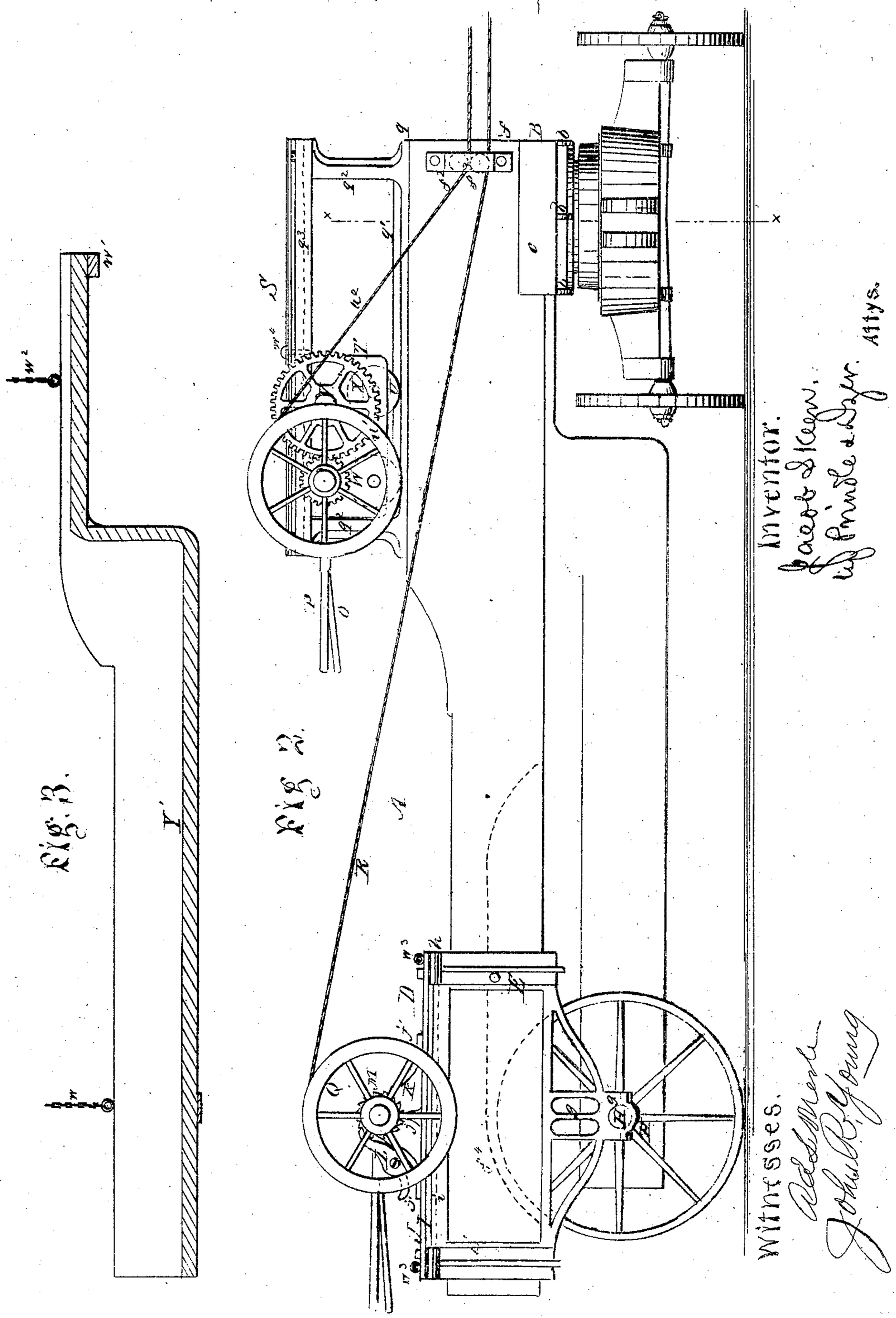

Jacob Skeen's Imp'd Wagon

Fig. 4.

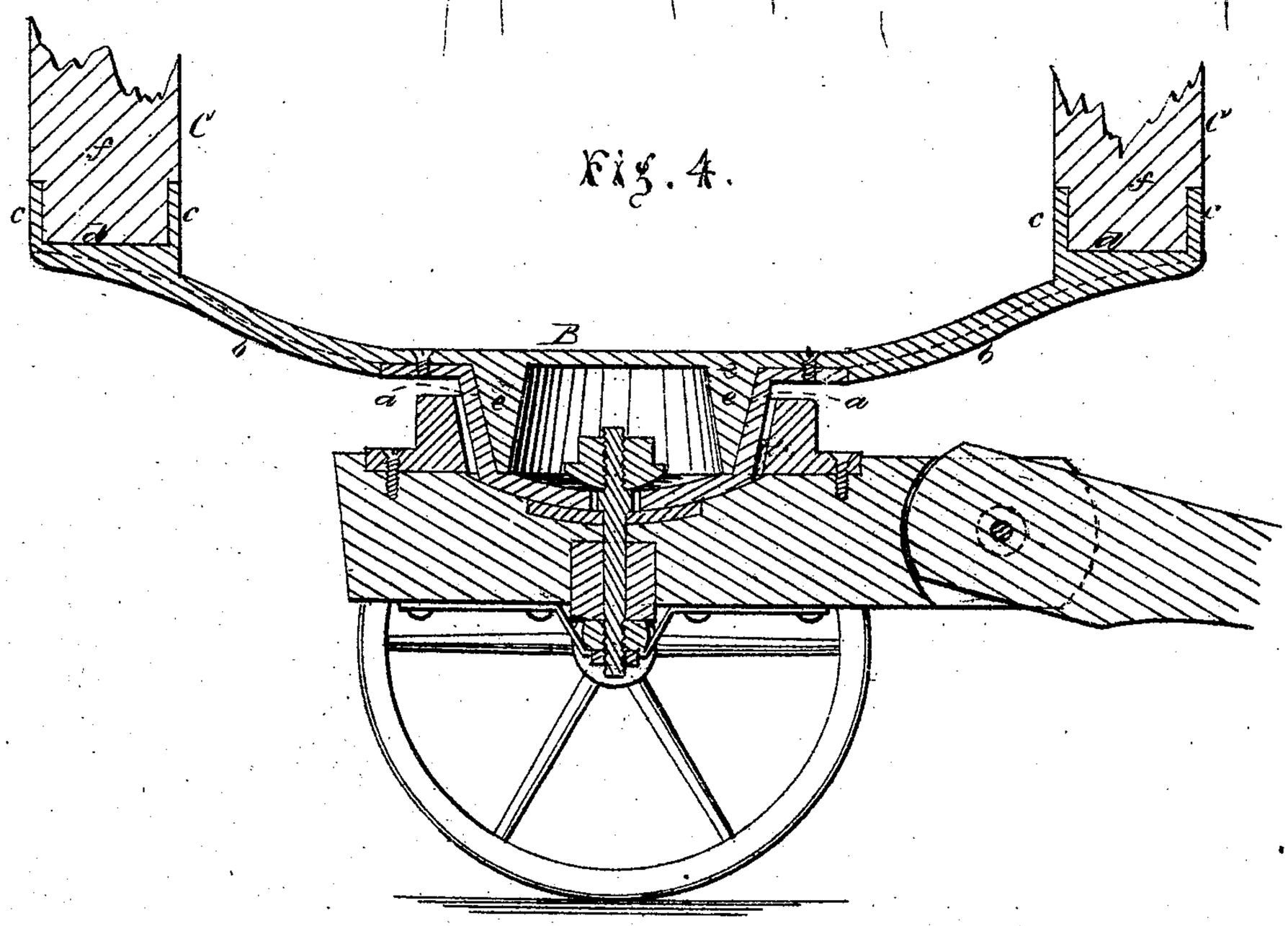

Fig. 5.

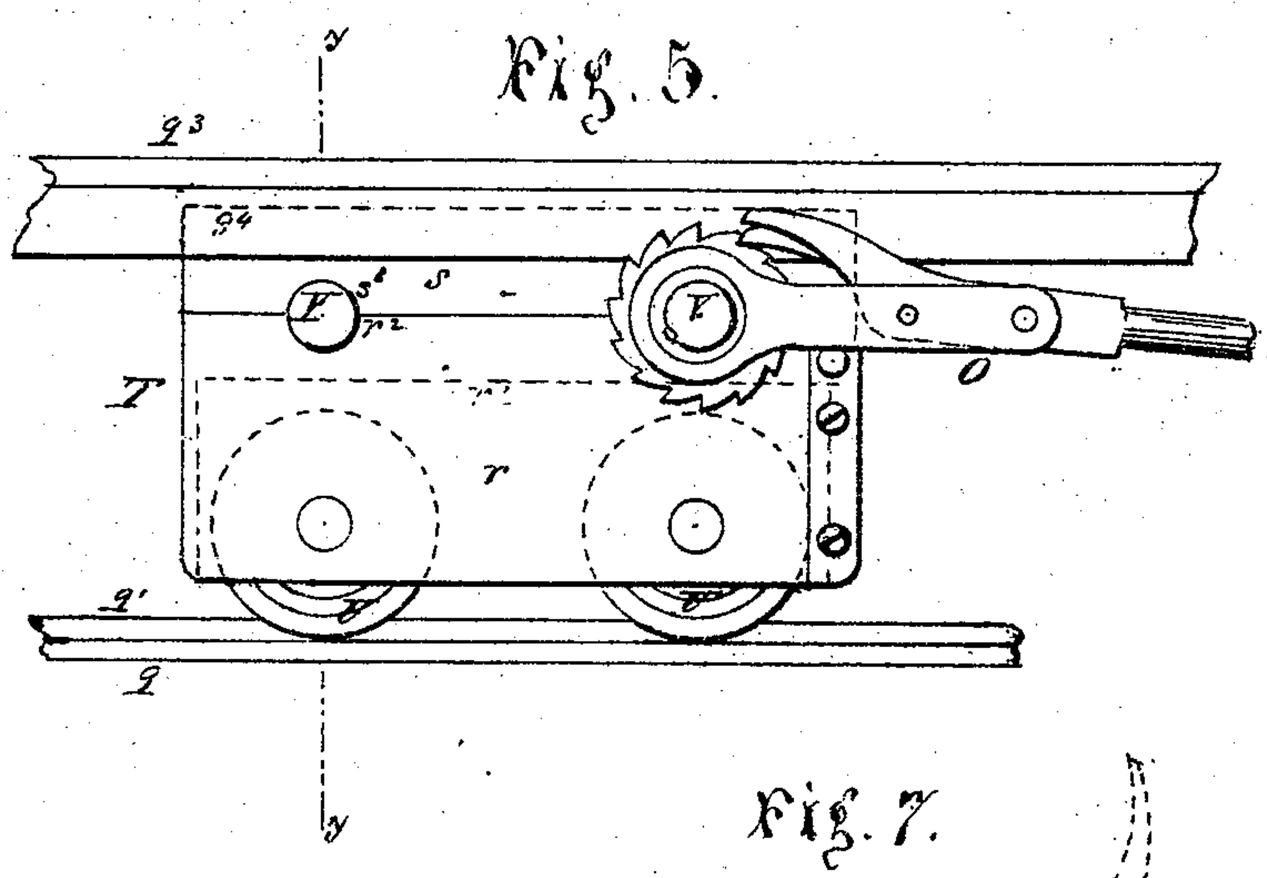

Fig. 6.

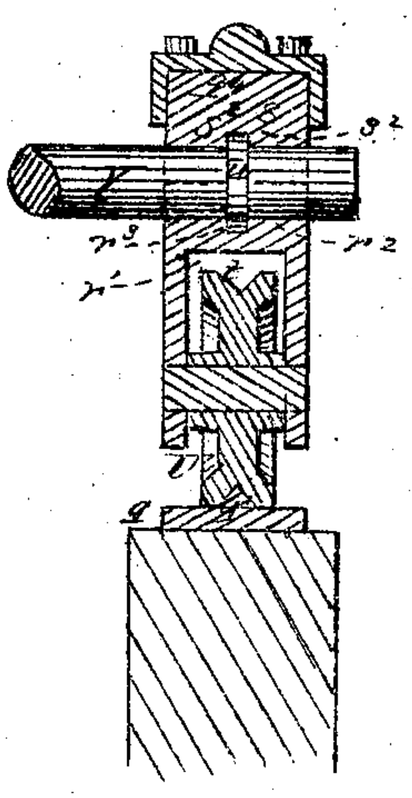

Fig. 7.

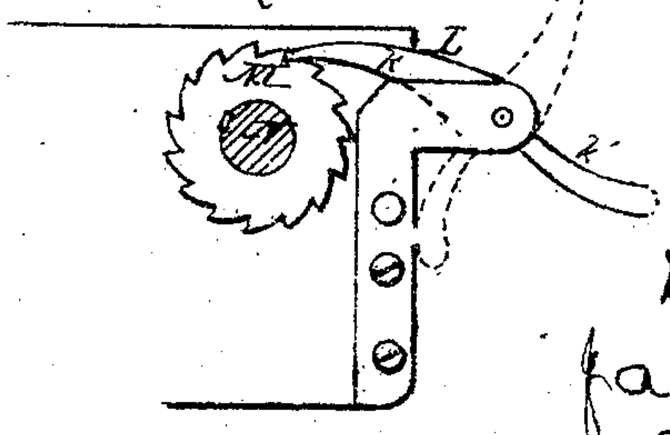

Witnesses.

A. E. Schmidt

John R. Young

Inventor.

Jacob Skeen

by Priestley & Zer.

Attys.

Jacob Skeen's Imp'd Wagon.

Fig. 8.

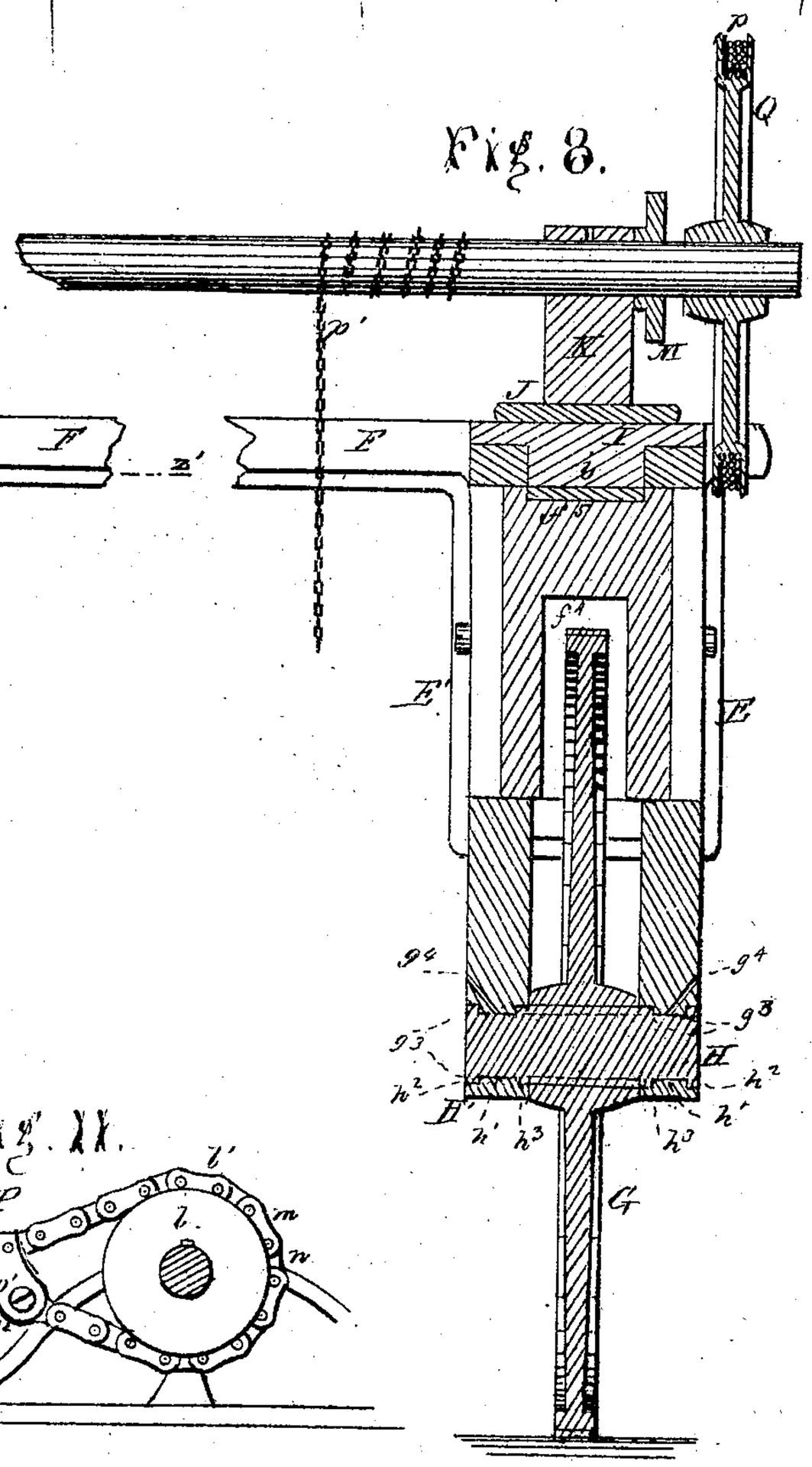

Fig. 9.

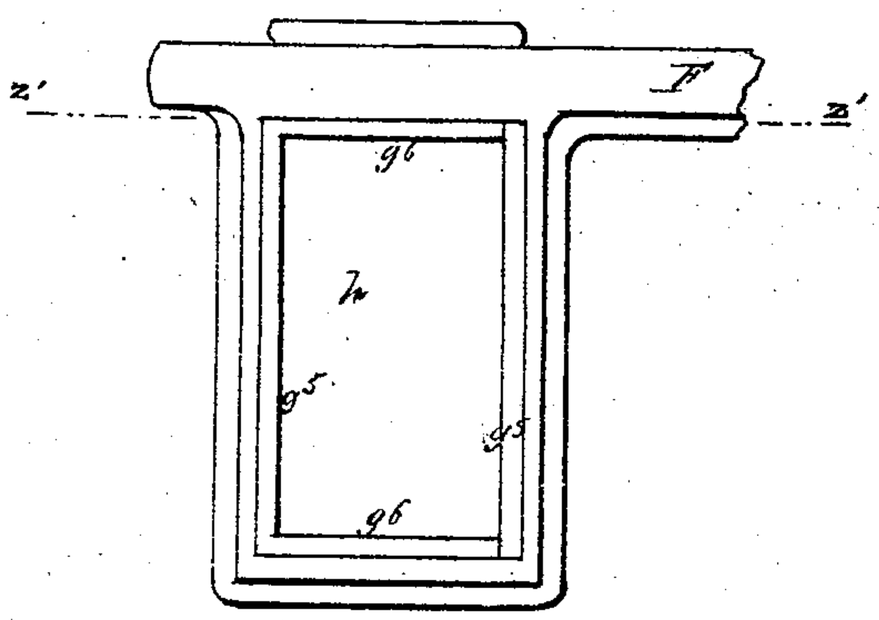

Fig. 11.

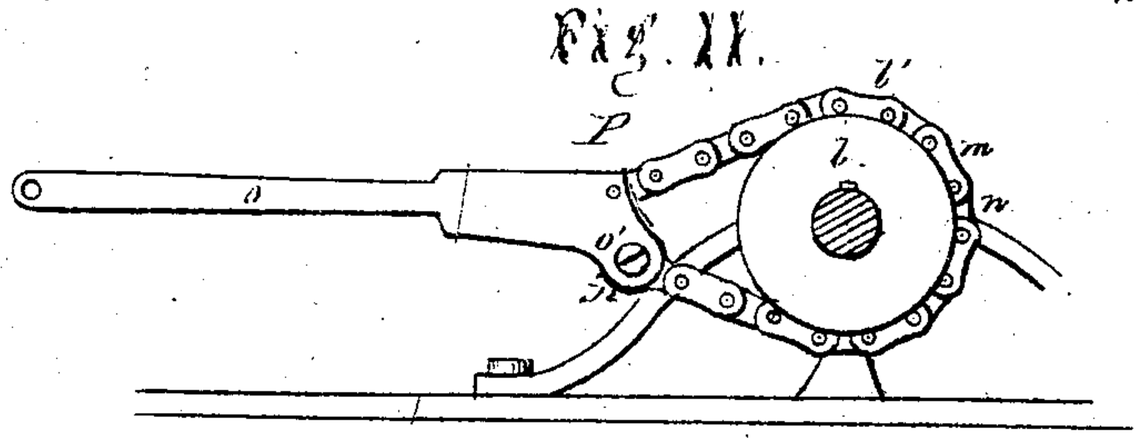

Fig. 10.

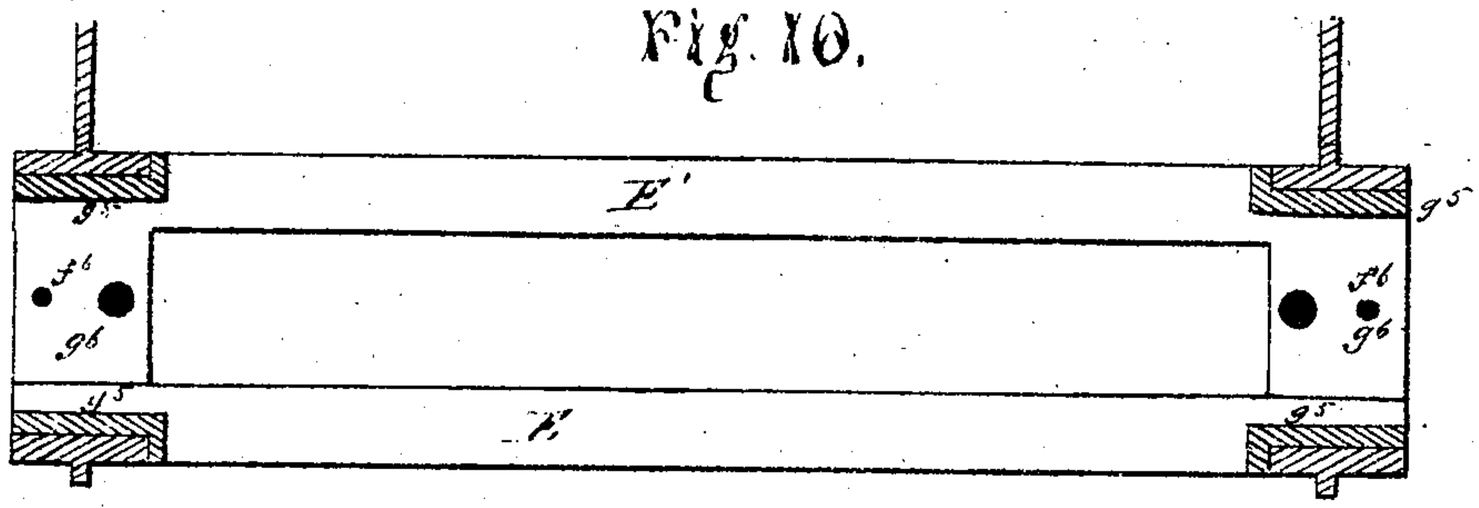

Witnesses

W. L. Mirk

John R. Young

Inventor.

Jacob Skeen

by Prindle & Dyer

Attys.

UNITED STATES PATENT OFFICE.

JACOB SKEEN, OF MOUND CITY, ILLINOIS.

IMPROVEMENT IN WAGONS.

Specification forming part of Letters Patent No. 117,004, dated July 11, 1871.

To all whom it may concern:

Be it known that I, JACOB SKEEN, of Mound City, in the county of Pulaski and in the State of Illinois, have invented certain new and useful Improvements in Wagons; and do hereby declare that the following is a full, clear, and exact description thereof, reference being had to the accompanying drawing, making a part of this specification, in which drawing—

Figure 1 is a plan view of the wagon from above. Fig. 2 is a side elevation of the same. Fig. 3 is a similar elevation of the detachable hanging body of the same; Fig. 4, a broken vertical cross-section on line *x x* of Fig. 2; Fig. 5, a side elevation of the truck-box and a portion of its frame; Fig. 6, a vertical cross-section of the same on line *y y* of Fig. 5; Fig. 7, a side elevation, showing the pawl in locked position, also in dotted lines as unlocked; Fig. 8, a vertical broken cross-section on the line *z z* of Fig. 1; Fig. 9, an end elevation of one of the rail-yokes with the connecting-bar broken off; Fig. 10, a horizontal section on the line *i i* of Fig. 9; and Fig. 11, a side elevation of one of the brakes.

Like letters of like kinds denote corresponding parts in each figure.

The object of my invention is the construction of a strong, cheap, and durable wagon, for the conveyance of cannon, stone, timber, or other heavy burdens, which may be loaded or unloaded by the driver without assistance from other men; and my invention consists in the construction and arrangement of the cross bearing-plate to the front of the wagon; the combination of the said plate with the side rails; in providing the side rails with a groove, in which the hind wheels traverse; in the construction and arrangement of the spindles to the hind wheels; in the construction of the trussed frame in which the hind wheels rotate; in the construction and arrangement of the box-frames in which the side rails traverse; in the combination of such box-frames with the yokes; in the combination and arrangement of the trucks, truck-boxes, and their frames; in the combination of the truck-boxes, their frames, and the connecting-shafts; in the combination of such trucks, truck-boxes, frames, and shafts with the hoisting-gear; in the frames employed for supporting the rear shaft; in the construction of the brake; in the construction and arrangement of the pawl; in the construction and arrangement of the rear winch-frame; in the combination of the two winches and the means for operating the same by chains or cords; in the construction and arrangement of the hanging body; and in the combination of the hanging body and the winches; all as more fully hereinafter described, explained, and set forth.

In the drawing, A represents the wagon, as a whole, supported on ordinary forward wheels and turning upon a fifth-wheel, which has been described in a patent already granted to me, the upper portion of the fifth-wheel having a cavity, *a*. B represents the front cross bearing-plate, cast in one piece of suitable metal, having ribs *b* on its under surface, and with its ends *c* turned up and their upper portions furnished with a rectangular cavity, *d*, extending nearly to their fronts. Upon the center of the bottom is a boss, *e*, corresponding in shape and size, so as to fit into the cavity *a* of the fifth-wheel. Into the cavities *d* in the cross bearing-plate B, the front ends *f* of the side rails C, suitably tenoned, are fitted and secured, so that the exterior surfaces of said ends of the side rails correspond with the outsides of the ends *c* of said plate. The side rails are made of suitable wood, preferably of the form shown in Fig. 2, with their rear ends f^1 cut away where they traverse in the box-frames, hereinafter described. On one side of the front end *f* is secured a box, f^2, provided with two pulley-wheels, f^3. The rear ends f^1 of the side rails are provided upon their under sides with a groove, f^4, for the reception of a portion of the tops of the hind wheels, as shown in dotted lines in Fig. 2, which groove extends nearly the whole length of the part of the rail called f^1, and rises vertically one-half or two-thirds of the depth of said part of the rail, and the top of said part f^1 is strengthened by a metallic plate, f^5, provided with suitable pin-holes f^6. The box-frames D, in which the side rails traverse back and forth, are composed of several pieces, each cast of suitable metal, constructed and connected together, as is now described. The outside side frame E, of the form shown in Fig. 2, is rectangular, with a truss, *g*, upon its lower side provided with a journal-box, g^2, having channels g^3 upon its outer and inner edges, and a suitable opening, g^4, for the purpose of oiling the spindles, and the ends of said frame are provided with rectangular tenons g^5. The inside frames E′ are constructed in all respects

like the outside ones E, except that its tenons are provided with wings g^6 above and below, turned over at right angles, and touching the tenons g^5, so as to separate the frames E and E′ a sufficient distance for the passage of the side rail between them. The yokes F are of a length sufficient to keep the side rails asunder the proper distance, and have rectangular open ends h, one of which is shown in Fig. 9, the opening in which ends just fits over the tenons g^5 and wings g^6 before named, and the thickness horizontally of such ends being precisely the length of said tenons and wings. When the parts are fitted together, the outer lines of all agree, and the whole box-frame D has a neat finish. These several parts, when in position, are secured in place by screws or other proper means. The hind wheels G are provided with spindles H, which taper a little in their centers, and are driven into the hub of the wheel from one side, and there secured, so that they turn with the wheel. The spindle is provided at either end with a rectangular groove, h^1, having outer shoulders h^2 and inner shoulders h^3, of a size and form to fit to and turn in the channels g^3 in the journal-boxes g^2. These spindles are held in place by boxes N′, made with grooves corresponding to those in the journal-box g^2, and secured to said boxes g^2 by suitable means. Upon the tops of the box-frames D, and covering the tops of the side frames E and E′, is placed the wooden washer I, having a tongue, i, drawn in dotted lines in Fig. 2, projecting down between said frames. Upon this washer is placed in turn a metallic covering-plate, J, covering the washer before named, and extending with a uniform width over the tops of the ends h of the yokes F. The drawing exhibits a separate frame, K, secured upon the top of the plate J, which frame I prefer in a working wagon to cast with said covering-plate in one piece. This frame is provided with a central standard, j, with end standards J^1, and with a cylindrical lug, J^2, upon which the pawl L is pivoted upon its center, with an upper biting end, k, and a lower end, h^1, so weighted that the head of the pawl, on being moved forward of the vertical line of its bearing, falls by its own weight into engagement, and on being moved back of such vertical line falls away from and remains without engagement. One of these pawls is pivoted to each of the frames K upon the outer side thereof, and engages with a ratchet-wheel, M, secured to a shaft, N, which is journaled in the frames K and extends across the wagon, projecting a little over its sides next and outside of said frames. Next outside of said ratchet-wheel, upon one end of the shaft, is secured a lever, O, which has been described in former Letters Patent granted to me. Upon the same end of the shaft, but inside the frame K and close to it, is placed the brake P, which is composed of a wheel, l, secured to said shaft, with a groove in its periphery, around which wheel and fitting in said groove is placed the chain l', which is composed of alternate double links m and single links n of sheet metal, the single links being placed between and pivoted to the double links, and all of them embracing said wheel within said groove with their edges. The lever o is provided with a lower extension, o', which is pivoted upon the inner end of the lug j^2, and has pivoted to it one end of the chain l', while the other end of said chain is pivoted to the upper corner of said lever. At the opposite end of the shaft N a ratchet-wheel and pawl are arranged, similar in all points of construction, location, and operation, with those just described and shown by L and M. Upon the same end of the shaft is secured the wheel Q, which is provided with a deep channel, p, upon its periphery, and is operated by a cord, R, passing around it, and extending forward over the pulley-wheel f^3. The shaft N is also provided with a chain or chains, p', whose ends are secured to said shaft in any convenient manner. Secured upon the top of the front end of the side rails C is the truck-box frame S, composed of two pieces of cast metal, the lower piece having a bottom, q, provided with a central longitudinal rib-track, q^1, and end standards q^2, over which are fitted and properly secured the top pieces q^3, provided with a groove, q^4, upon its under side, extending nearly its entire length. A truck-box, T, is composed of two parts, each cast of proper metal, the lower part r having a cavity, r^1, which occupies nearly its whole dimension, with its mouth downward, and upon its top journal-boxes r^2 provided with grooves r^3, and the upper part s having corresponding journal-boxes s^1 and grooves s^2. The lower part of this truck-box contains a pair of trucks, U, upon the same longitudinal line, which turns upon shafts secured in the sides of said box, and which has its edges provided with channels t, to correspond with the rib-track q^1 upon which it traverses. The upper part of said box fits into and traverses in the groove q^4 in the top piece q^3, just described. A shaft, V, passes across the wagon, with ends projecting over the sides thereof, and is journaled in the boxes r^2 and s^1 in the truck-boxes, and has upon it flanges u which turn in and fit to the grooves r^3 and s^2. At the corresponding end of the shaft, where the same parts are placed upon the shaft N, are placed brakes and levers, corresponding in all respects to those upon said shaft N. At the opposite end of the shaft V is placed a wheel, u^1, corresponding in all respects with the wheel Q, before described, and provided with a corresponding cord, u^2, which extends forward and passes over one of the pulley-wheels f^3. Upon this shaft V and between the wheel n and the truck-box, is secured a pinion, W, which meshes with a gear-wheel, X, upon the outer end of a shaft, Y, which is constructed like the shaft V, and extends across the wagon, and is journaled in the truck-boxes in the manner described with regard to said shaft V. A chain or chains, v, is secured to this shaft, also, in any proper manner. A body, Y′, shown particularly in Fig. 3, has its rear end, when in use, suspended under the wagon, by means of the chains p', and by means of chains w attached to the sides of said body, while the front end, which is curved up and forward, rests upon the top of the cross bearing-plate B, having at its front under edge a stop, w^1, which, passing over the

front edge of said bearing-plate, prevents said body, when nearly upon a level, from sliding backward, but when the rear end of said body is lowered, the stop is raised upon said edge of the bearing, and the body may slide over said bearing. This front end is also provided with suitable chains w^2, which may be attached to the chains on the shaft Y, for the purpose of raising such front end. Suitable pins w^3, passing down through the side rails C, keep them in the desired position, and other pins, w^4, passing down through the upper part of the winch-box frame, hold said winch-box in the position required.

In operation the uses and advantages of the several parts are as follows, viz.: When the body Y′ is used it may be left upon the ground in such a position that the wagon can be conveniently backed over it. In this position it may be readily loaded with the stone, iron, or other heavy material to be carried. The wagon is then backed over it, the chains of the body attached to the chains on the forward and rearward shafts, the body raised by hand by means of the levers connected with said shafts, or by attaching a portion of the team to the cords operating the power-wheels attached to said shafts, until the body is raised to a sufficient height. By removing the stay-pins to the truck-box frame, it will slide forward upon its trucks by the weight and the draft of the chains; or this may be done by first raising the forward end of the body and backing the wagon. The forward end of the body may then be lowered upon the cross bearing-plate by raising the proper pawl, and the lowering be regulated by the proper brake. The forward end of the body will then be supported upon said cross bearing-plate, and retained in place there by means of the stop upon its front under edge, and the rear of said body will remain suspended by its proper chains. In unloading, the rear end of the body is lowered so as to disengage the stop before spoken of, the stay-pins to the truck-box frame removed, and the truck-box will slide to the rear and off the cross bearing-plate, when the whole body may be lowered to the ground, and the wagon removed out of the way. In the carriage of long and heavy cannon, columns of stone, and other long and heavy burdens, where the body is not used, the manner of loading and unloading will be substantially the same as that already described. When it is essential to shorten the distance between the fore and hind wheels it is done conveniently by removing the proper stay-pins and backing the team, and, to lengthen said distance, to remove said pins again and start up the team, in each instance first trigging the hind wheels.

The advantages of the several parts of my wagon, described as novel, are as follows, viz.: The cross bearing-plate, as constructed, gives a firm lateral support to the frame of the wagon, in connection with the shafts, which turn in the truck-boxes; a convenient and strong support to the forward ends of the side rails; and a firm bearing upon the fifth-wheel, by means of the boss, which fits into the upper cavity of said fifth-wheel. By means of the groove in the side rails, said rails are placed immediately over the rims of the hind wheels, whereby said wheels may be used of large size and of easier traction, at the same time that the strength of said side rails is not materially lessened. By means of the construction of the spindles to the hind wheels, such wheels may be used without a connecting axle, and the wheels themselves strongly supported in a vertical position, without danger of binding or cramping. In the truss-frame carrying the boxes for the wheel-spindles just spoken of are combined strength with lightness.

By means of the construction, combination, and connection of the box-frames for the side pieces and the yokes, a very strong yet light method is employed for preserving sufficient lateral and vertical strength to the rear part of the wagon, so that the support of an axle and the usual cross-bars are not needed.

The truck-boxes and their frames, as employed, and the hoisting apparatus, have the merits of simplicity, cheapness, convenience, and great lifting power. The advantages of the brakes and pawls are apparent upon the most casual inspection. The advantages of the whole wagon consist principally in its cheapness and strength, arising from the large employment of cast metal; in its simplicity of parts, each serving a useful purpose; and in its convenience in use.

Having thus described the construction of my wagon, the manner of its use, and some of the special advantages of its operative parts, what I claim as new therein is—

1. The cross bearing-plate B, constructed substantially as described and shown.

2. The combination of the cross bearing-plate B and the side rails C, constructed and secured together, substantially as described and shown.

3. The side rails C, provided with the groove f^4, in combination with the hind wheels G, constructed and arranged substantially as described and shown.

4. The combination of the wheels G, the spindles H, and the journal-boxes g^2, all constructed and arranged substantially as and for the purpose described and shown.

5. The combination of the wheels G, the spindles H, and the trusses g, constructed and arranged substantially as and for the purpose described and shown.

6. The combination of the side frames E and E′, constructed and arranged substantially as described and shown.

7. The combination of the side frames E and E′, with the yokes F, all constructed, arranged, and connected substantially as described and shown.

8. The combination of the trucks U, the truck-boxes T, and their frames S, all constructed and arranged substantially as described and shown.

9. The combination of the trucks U, the truck-boxes T, the frames S, and shafts V and Y, all constructed and arranged substantially as described and shown.

10. The combination of the trucks U, the truck-boxes T, the frames S, the shafts V and Y, and the wheel u, the pinion W, and the gear-wheel

X, all constructed and arranged substantially as described and shown.

11. The covering-plate J, provided with the frame K, cast in one piece, and constructed and arranged substantially as described and shown.

12. The brake P, composed of the wheel *l*, the chain *l'*, and the lever *o*, all constructed, arranged, and operated substantially as described and shown.

13. In combination with the covering-plate *f* provided with the frame K, the balance-pawl L, constructed, arranged, and operated substantially as described and shown.

14. The combination of the shaft N, the wheel Q, the cord R, the brake P, the ratchet-wheel M, the pawl L, and the lever O, all constructed, arranged, and operated substantially as described and shown.

15. The combination of the forward and rear winches in one wagon, each winch being constructed, and both arranged and operating as described and shown.

16. The body Y', constructed, arranged, and operated substantially as described and shown.

17. The combination of the body Y', the shafts N, Y, and V, and their operative devices, all constructed and arranged substantially as described and shown.

18. The wagon A, as a whole device, with its several parts constructed, arranged, and operating substantially as described and shown.

In testimony that I claim the foregoing I have hereunto set my hand this 31st day of May, 1871.

JACOB SKEEN.

Witnesses:
GEO. S. PRINDLE,
EDM. F. BROWN.