J. McConnell,

Fence.

No. 100431. Patented Mar. 1. 1870.

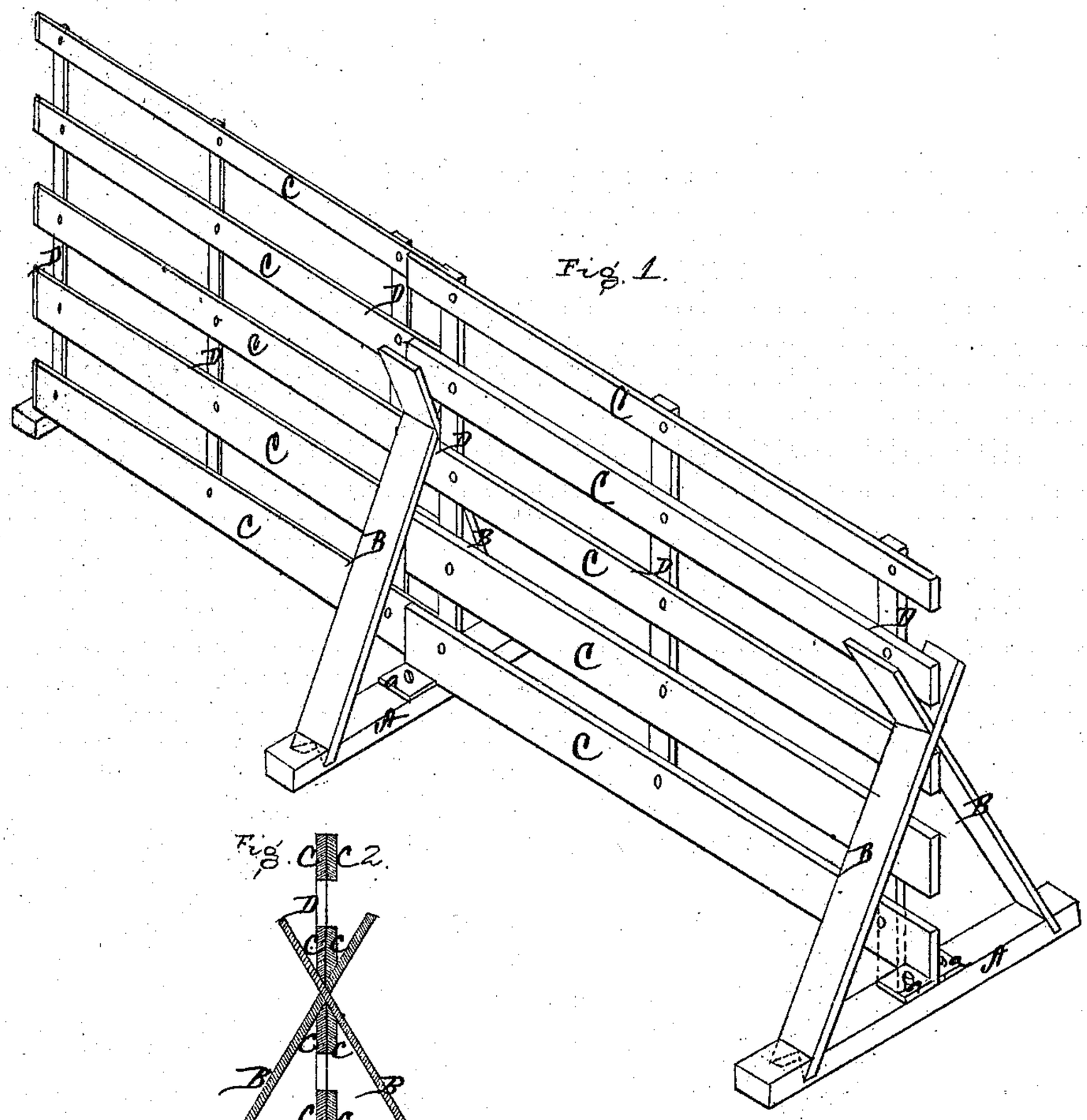

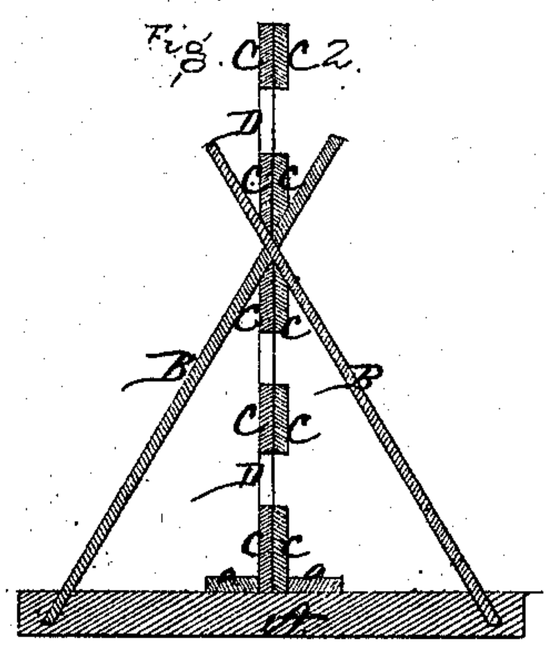

Witnesses
F. Lehmann
C. L. Evers

Inventor,
Jno. McConnell
per Alexander Mason
Atty.

N. PETERS, PHOTO-LITHOGRAPHER, WASHINGTON, D. C.

United States Patent Office.

JOHN McCONNELL, OF TYRO, OHIO.

Letters Patent No. 100,431, *dated March* 1, 1870.

IMPROVEMENT IN FENCE.

The Schedule referred to in these Letters Patent and making part of the same

To all whom it may concern:

Be it known that I, JOHN McCONNELL, of Tyro, in the county of Crawford, and in the State of Ohio, have invented certain new and useful Improvments in Fences; and do hereby declare that the following is a full, clear, and exact description thereof, reference being had to the accompanying drawings and to the letters of reference marked thereon making a part of this specification.

The nature of my invention consists in the construction and arrangement of a "portable fence," which can readily be taken down and put up again, and when put up will be strong and durable.

In order to enable others skilled in the art to which my invention appertains to make and use the same, I will now proceed to describe its construction and operation, referring to the annexed drawings, in which—

Figure 1 is a perspective view of the fence; and

Figure 2 is a longitueinal vertical section taken through the center of the fence-post.

A represents the bed piece of the fence-post, being of any suitable dimension, and having inserted on its upper side, near each end, a board, B, which is of the same width as the bed piece.

The lower ends of the boards B B are each cut with a V-shaped notch, beveled on the inner side, and the upper side of the bed piece A is near each end provided with a recess in the shape of a V, beveled inward, in which the lower ends of the boards are inserted, giving them an inclined position inward toward each other, so as to cross each other near their upper ends, forming an X.

At the point where the two boards B B cross each other they are dovetailed into each other, and thus are firmly and securely braced without the aid of bolts, screws, or any other devices.

The fence-panels are composed of horizontal boards, C C, connected by means of vertical slats, D D.

One fence-panel is inserted from each side in the fence-post, the bottom boards resting on the center of the bed piece A, between two clamps, *a a*, secured to the upper side of the bed piece.

Two of the horizontal boards of each fence-panel are so placed as to fit exactly one above and the other below the joint of the boards B B, the edges of said fence-panel boards being beveled at the ends, as seen in fig. 2, so as to fit snugly in the joint.

The vertical slats D D at the ends of the fence-panel are placed so that when the panels are inserted in the fence-posts they shall come close up to said posts, and the slats D D may extend below the bottom board, so as to bear against the bed piece A, if deemed necessary.

Having thus fully described my invention,

What I claim as new, and desire to secure by Letters Patent, is—

The combination of the fence sections, composed of the panels C and posts D, with the base A, braces B B, notched at their lower ends, and the blocks *a a*, all constructed substantially as shown and described.

In testimony that I claim the foregoing, I have hereunto set my hand this 18th day of September, 1869.

JOHN McCONNELL.

Witnesses:

JOHN MILLER,

HENRY ELLER.