E. T. HENRY.

DIE FOR FORMING SPIKES.

No. 16,440. Patented Jan. 20, 1857.

Fig. 1.

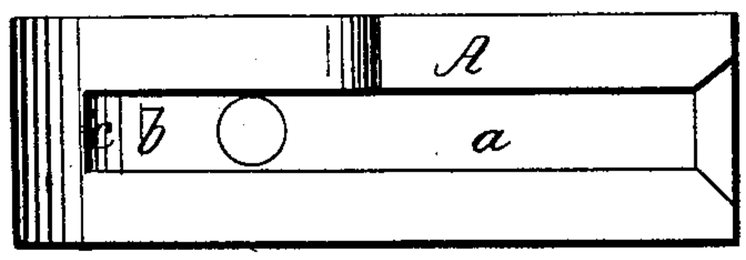

Fig. 2.

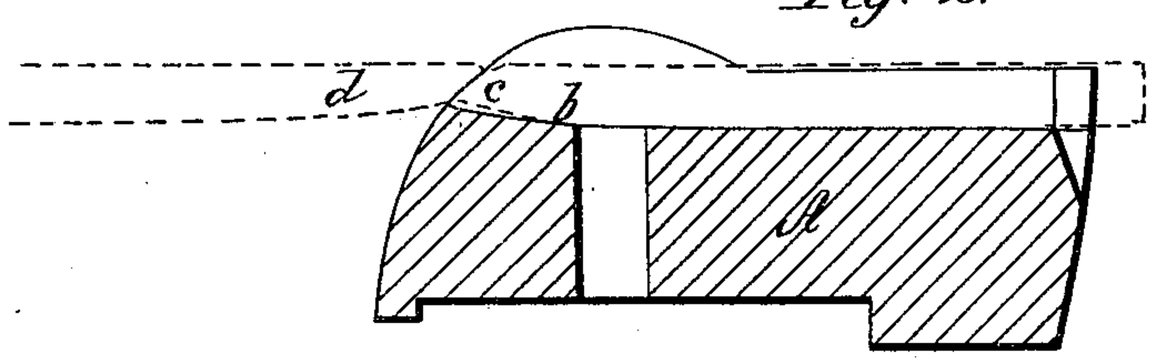

Fig. 3.

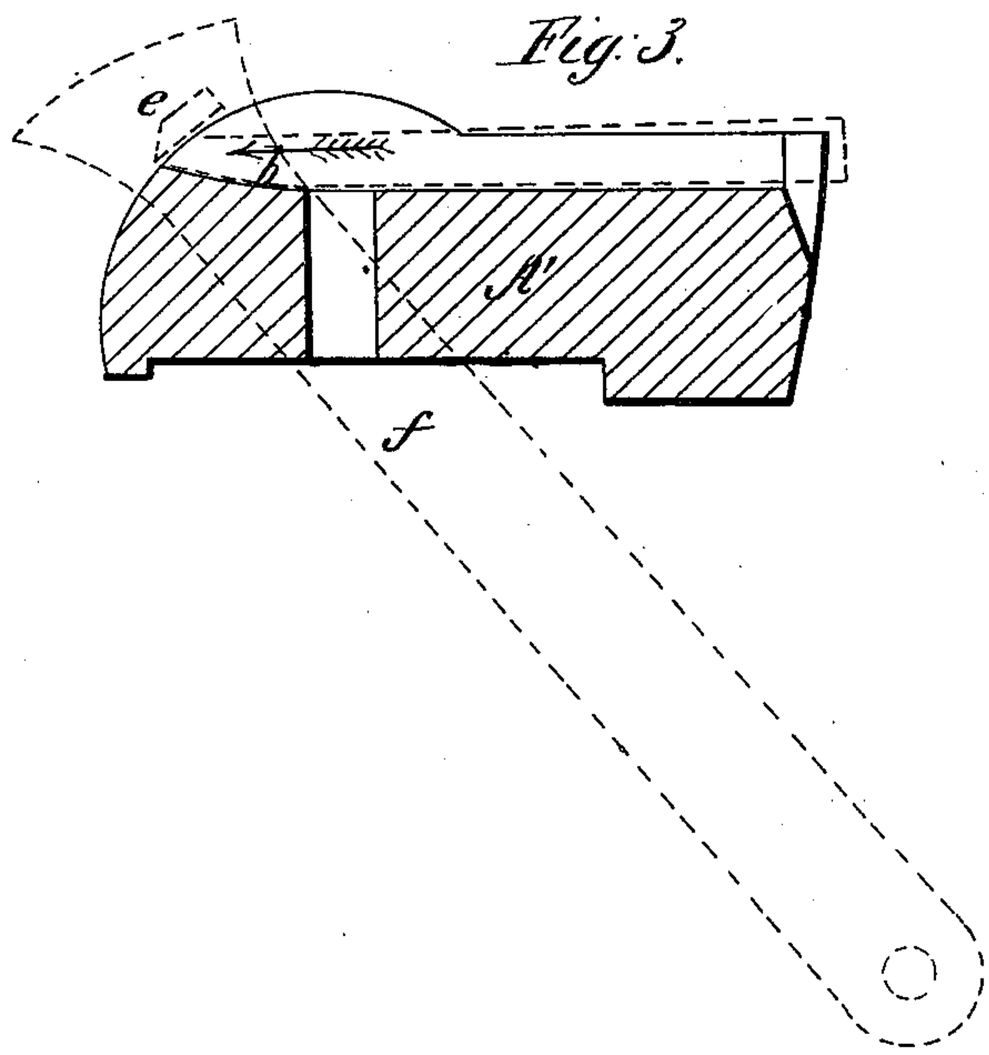

THE NORRIS PETERS CO., PHOTO-LITHO., WASHINGTON, D. C

UNITED STATES PATENT OFFICE.

E. T. HENRY, OF SCRANTON, PENNSYLVANIA.

DIE FOR MAKING SPIKES.

Specification of Letters Patent No. 16,440, dated January 20, 1857.

To all whom it may concern:

Be it known that I, E. T. HENRY, of Scranton, in the county of Luzerne and State of Pennsylvania, have invented a new and useful Improvement in Dies for Forming Railroad-Spikes; and I do hereby declare that the following is a full, clear, and exact description of the same, reference being had to the annexed drawings, making a part of this specification, in which—

Figure 1, is a face view of my improvement. Fig. 2, is a longitudinal section of ditto. Fig. 3, is a longitudinal section of the ordinary die or that now used.

This invention relates to a new and useful improvement in dies to be applied to a spike machine, formerly patented by A. M. George.

The invention consists in forming a lip or cutting edge at the point end of the die, as will be presently shown and described.

To enable those skilled in the art to fully understand and construct my invention, I will proceed to describe it.

A, Figs. 1 and 2, represents my improved die. This die is constructed of chilled cast iron and has a groove, *a*, made in its face side, said groove corresponding in form to three sides of the spike to be formed by it. The back or inner side of the groove, *a*, is curved as shown at *b*. This curve forms one side of the taper at the point end of the spike. At the point end of the groove, *a*, that is, at the extreme end of the curve *b*, a projecting lip, *c*, is formed. This lip forms a cutting edge at the point end of the groove *a*, as clearly shown in Fig. 2. The bars, *d*, from which the "blanks" are cut, are properly heated and placed in the groove *a;* a knife, *e*, which is attached to a radius arm, *f*, cuts off the "blank" or part of the bar which is within the groove *a*, of the die, and the head is then formed by a heading device.

In Fig. 3, the ordinary die A^1, is shown or the die which was intended by the inventor, Mr. George, to be used with the machine. This die is constructed precisely similar to my improved die, with the exception of the lip, *c*. This lip constitutes my improvement and its object is to hold the "blank" or prevent it from slipping or moving while within the die or groove, *a*.

It will be seen, by referring to Fig. 3, that when the knife *e*, acts upon the bar *d*, it has a tendency to force the bar outward, as indicated by the arrow, and as there is nothing on the die to hold it, the bar is shifted and the knife is sprung out from the die. In my improvement, the lip *c*, penetrates the bar and prevents it from sliding, the lip forming a shoulder or bearing for the "blank" at the point end of the groove. The curve *b*, forms the taper at one side of the spike, and the oblique cut of the knife, *e*, forms the taper on the opposite side.

The objection to the old die, above alluded to, rendered the machine patented by George, almost useless; perfect spikes could not be made with it, but with my improved die, the machine works admirably and is now, probably, the best machine in use for making railroad spikes.

Having thus described my invention, what I claim as new and desire to secure by Letters Patent, is,

The lip *c*, formed at the point end of the groove *a* in the die A, substantially as shown for the purpose specified.

E. T. HENRY.

Witnesses:
H. A. KINGSBURY,
EDW. P. KINGSBURY.